ORDER NO. VRD8802M119

Service Manual

Video Cassette Recorder

Panasonic

VHS PAL HQ DIGITAL

NV-D48EG/B

General Description
Adjustment Procedures
Block / Schematic Diagrams
Exploded Views / Parts List

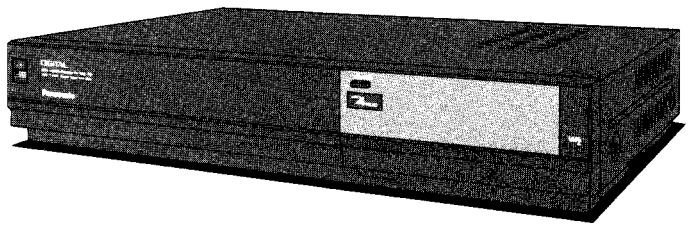

SPECIFICATIONS

ITEM	SPECIFICATION
POWER	SOURCE: 220V 50/60Hz (NV-D48EG) 240V 50/60Hz (NV-D48B)
	CONSUMPTION: 29W (NV-D48EG) 28W (NV-D48B)
RECORDING SYSTEM	2 rotary heads, helical scanning system
	PAL
TV TUNER SYSTEM	NV-D48EG: VHF I: CH E2~CH E4 VHF III: CH S4~CH E12 VHF H: CH S11~CH S41 (PAL/SECAM B) 75Ω unbalanced UHF: CH 21~CH 69 (PAL/SECAM G) 75Ω unbalanced
	NV-D48B: UHF: CH 21~CH 69 (PAL I) 75Ω unbalanced
RF OUT SYSTEM	UHF: CH 36±4 (PAL/SECAM G 73^{+2}_{-3}dBμ, 75Ω terminated (NV-D48EG) UHF: CH 36±4 (PAL I) 73±3dBμ, 75Ω terminated (NV-D48B)
VIDEO	HEADS: 4 rotary heads 1 pair for recording, playback (L-R heads) 1 pair for trick play (L′-R′ heads)
	INPUT: VIDEO IN Connector (BNC type) 1.0Vp-p, 75Ω terminated (NV-D48EG/B) EURO AV Connector (21 pin) 1.0Vp-p, 75Ω terminated (NV-D48EG)
	OUTPUT: VIDEO OUT Connector (BNC type) 1.0Vp-p, 75Ω terminated (NV-D48B) EURO AV Connector (21 pin) 1.0Vp-p, 75Ω terminated (NV-D48EG)

ITEM	SPECIFICATION
AUDIO	HEAD: 1 Stationary head (Normal Audio)
	INPUT: AUDIO IN Connector (Phono type) More than −10dBV (316mV), more than 50kΩ (NV-D48EG/B) EURO AV Connector (21 pin) More than −10dBV (316mV), more than 10kΩ (NV-D48EG)
	OUTPUT: AUDIO OUT Connector (Phono type) −8dBV (400mV), Less than 1kΩ (NV-D48B) EURO AV Connector (21 pin) −6dBV (500mV), Less than 1kΩ (NV-D48EG)
TAPE FORMAT	VHS Cassette tape (Tape width 12.7mm)
TAPE SPEED	23.39mm/s Record/Playback Time: 4 hours with 240min. type tape FF/REW Time 5.5min. with 180min. type tape
DIMENSIONS	430(W)×82(H)×357.5(D)mm
WEIGHT	5.9kg
STANDARD ACCESSORIES	1 pc. DIN-RF Cable 1 pc. Infra-red remote controller 1 pc. Digital Scanner Case 1 pc. Digital Scanner 1 pc. Programme sheet 1 pc. AC Mains Lead 1 pc. Cleaning Brush

Weight and dimensions shown are approximate.
Specifications are subject to change without notice.

Panasonic

Matsushita Electric Trading Co., Ltd.
P.O. Box 288, Central Osaka Japan

INTRODUCTION

This service manual contains technical information which will allow service personnels to understand and service this model.
Section 1 presents you with some general information of features and controls, enabling you to become familiar with each function.
Section 2 contributes to your mechanical and electrical adjustment as well disassembly and replacement procedures.
In the case of very common information relating to other models like mechanical adjustments, please refer to each service manual.
Section 3 contains block diagrams which offers you information for checking and understanding each circuit. Schematic diagrams which give you detailed information such as waveforms, voltage data, function e.t.c...
Section 4 contains exploded views and parts list.
Please place orders using the parts list and not the drawing reference numbers.
If the circuit is changed or modified, this information will be followed by supplementary service manual to be filed with original service manual.

CONTENTS

TECHNICAL INFORMATION

SECTION 1

GENERAL DESCRIPTIONS 1-1

1-1. FEATURES 1-1
1-2. CONTROLS & COMPONENTS 1-2
1-3. PROGRAMMABLE REMOTE CONTROLLER AND DIGITAL SCANNER 1-4
1-4. DIGITAL SPECIAL EFFECTS 1-6
1-5. DIGITAL INTRO SCAN FUNCTION 1-8
1-6. VHS INDEX SEARCH SYSTEM 1-9
1-7. TIME SEARCH 1-10

SECTION 2

ADJUSTMENT PROCEDURES 2-1

2-1. MECHANICAL ADJUSTMENT PROCEDURES 2-1
2-2. DISASSEMBLY METHOD 2-1
2-3. ELECTRICAL ADJUSTMENT PROCEDURES 2-4

SECTION 3

BLOCK DIAGRAMS & SCHEMATIC DIAGRAMS 3-1

3-1. SYSTEM CONTROL & TIMER BLOCK DIAGRAM 3-1
3-2. SERVO BLOCK DIAGRAM 3-4
3-3. LUMINANCE & CHROMINANCE BLOCK DIAGRAM 3-7
3-4. DIGITAL BLOCK DIAGRAM 3-9
3-5. POWER SCHEMATIC DIAGRAM 3-11
3-6. POWER C.B.A. 3-13
3-7. POWER SUPPLY Section In Main C.B.A. 3-15
3-8. SYSTEM CONTROL SCHEMATIC DIAGRAM 3-16
3-9. SERVO SCHEMATIC DIAGRAM 3-19
3-10. SYSTEM CONTROL & SERVO Section In Main C.B.A. 3-23
3-11. SUB MAIN PACK SCHEMATIC DIAGRAM 3-27
3-12. VISS PACK SCHEMATIC DIAGRAM 3-31

3-13. SUB MAIN PACK C.B.A. & VISS PACK C.B.A. 3-33
3-14. LUMINANCE & CHROMINANCE SCHEMATIC DIAGRAM 3-36
3-15. LUMINANCE & CHROMINANCE PACK SCHEMATIC DIAGRAM 3-38
3-16. LUMINANCE & CHROMINANCE Section In Main C.B.A. 3-41
3-17. LUMINANCE & CHROMINANCE PACK C.B.A. 3-44
3-18. HEAD AMP SCHEMATIC DIAGRAM 3-46
3-19. HEAD AMP C.B.A. 3-48
3-20. INPUT/OUTPUT PACK C.B.A. (NV-D48EG) 3-50
3-21. INPUT/OUTPUT PACK SCHEMATIC DIAGRAM (NV-D48EG) 3-51
3-22. SUB DIGITAL SCHEMATIC DIAGRAM 3-54
3-23. SUB DIGITAL C.B.A. 3-57
3-24. MAIN DIGITAL SCHEMATIC DIAGRAM 3-60
3-25. MAIN DIGITAL C.B.A. 3-63
3-26. AUDIO SCHEMATIC DIAGRAM 3-66
3-27. AUDIO Section In Main C.B.A. 3-69
3-28. CH SELECT Section In Main C.B.A. 3-71
3-29. CH SELECT SCHEMATIC DIAGRAM 3-73
3-30. TUNER & TV DEMODULATOR PACK SCHEMATIC DIAGRAM (NV-D48EG) 3-76
3-31. TUNER & TV DEMODULATOR PACK C.B.A. (NV-D48EG) 3-79
3-32. TUNER & TV DEMODULATOR PACK C.B.A. (NV-D48B) 3-81
3-33. TUNER & TV DEMODULATOR PACK SCHEMATIC DIAGRAM (NV-D48B) 3-83
3-34. TIMER & OPERATION SCHEMATIC DIAGRAM 3-86
3-35. TIMER C.B.A. & OPERATION C.B.A. 3-89
3-36. VPS PACK SCHEMATIC DIAGRAM (NV-D48EG) 3-92
3-37. VPS PACK C.B.A. (NV-D48EG) 3-94
3-38. MAIN C.B.A. 3-95
3-39. RF CONVERTER SCHEMATIC DIAGRAM (NV-D48EG) 3-98
3-40. RF CONVERTER SCHEMATIC DIAGRAM (NV-D48B) 3-98
3-41. DIGITAL SCANNER SCHEMATIC DIAGRAM 3-99
3-42. DIGITAL SCANNER C.B.A. 3-101
3-43. REMOTE CONTROLLER SCHEMATIC DIAGRAM 3-103
3-44. REMOTE CONTROLLER C.B.A. 3-104
3-45. INTERCONNECTION SCHEMATIC DIAGRAM 3-105
3-46. ICs & TRs INFORMATION 3-108

SECTION 4
EXPLODED VIEWS & PARTS LIST 4-1

4-1. EXPLODED VIEW 4-1
1. CHASSIS PARTS SECTION (1) 4-1
2. CHASSIS PARTS SECTION (2) 4-2
3. CASSETTE UP MECHANISM SECTION 4-3
4. CASING PARTS SECTION 4-4
5. PACKING PARTS SECTION 4-5
6. REMOTE CONTROLLER UNIT 4-6
7. DIGITAL SCANNER 4-7

MECHANICAL REPLACEMENT PARTS LIST

ELECTRICAL REPLACEMENT PARTS LIST

REMARKS (NV-D48EG West Germany model only)

1. It is possible to receive, record and play back colour broadcasts from East Germany (DDR) on this video recorder.
2. When a video tape that was recorded with a colour TV broadcast from East Germany on this VTR is played back on a SECAM (France) or a PAL VTR, the picture may be in black and white.
3. When a video tape recorded on a SECAM (France) VTR or a SECAM (France) pre-recorded video tape is played back on this VTR, the picture is in black and white.

Technical Information

Subject: How to make easier servicing

We are pleased to inform you how to make easier servicing of NV-D48EG/B.

1. HOW TO MAKE EASIER SERVICING OF A PACKED CIRCUIT

In the case of the Luminance & Chromunance Pack and Sub Main C.B.A., you can remove the Main C.B.A. from its frame. At that time unlock the 2 Hinges and lift up paying attention not touch any other portion as shown in Fig. T1 and Fig. T2.

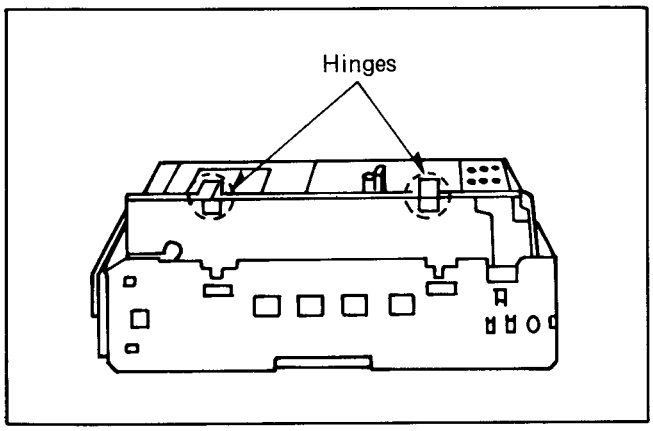

Fig. T1

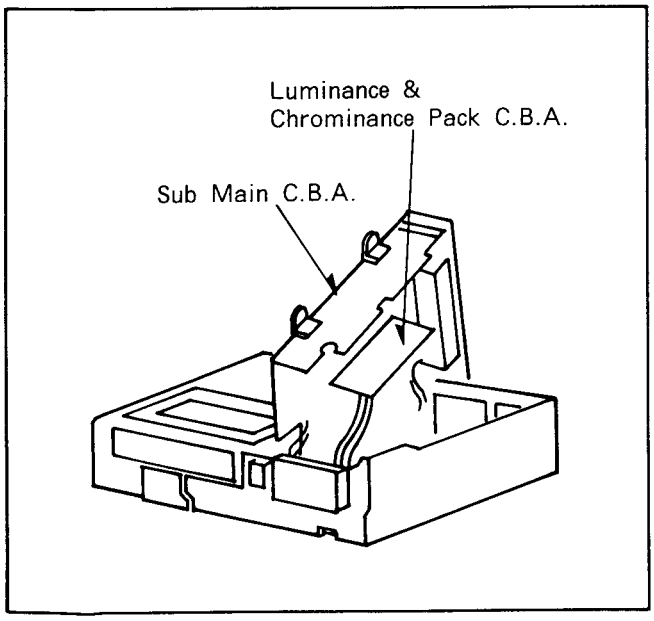

Fig. T2

2. HOW TO CHECK OR REPLACE THE TIMER CIRCUIT

When checking or replacing the Timer circuit, the following steps should be followed to protect this circuit.

(1) Disconnect the AC mains.
(2) Make a short circuit at C7571 by connecting a wire to both lead wires of the C7571.

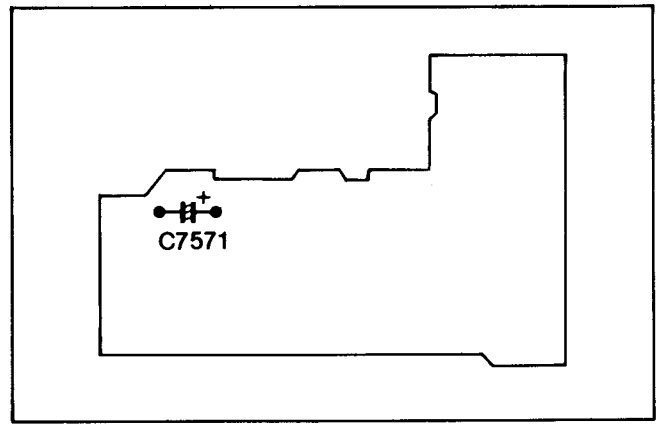

Fig. T3

3. HOW TO USE THE UPPER CYLINDER REMOVER

The newly developped Upper Cylinder Remover is usefull to remove the upper cylinder easily, especially when it is too hard to remove by hand, Removing procedure is also as described below.

(1) Remove 2 screws (A), then unsolder the soldered portions indicated by arrows as shown in Fig. T5.
(2) Set the screws of Upper Cylinder Remover into holes (B), then tighten the screws of Upper Cylinder Remover fully.
(3) Turn the handle of Upper Cylinder Remover clockwise holding the upper cylinder firmly until it is removed.
(Upper Cylinder is lifted up gradually during turning the handle.)

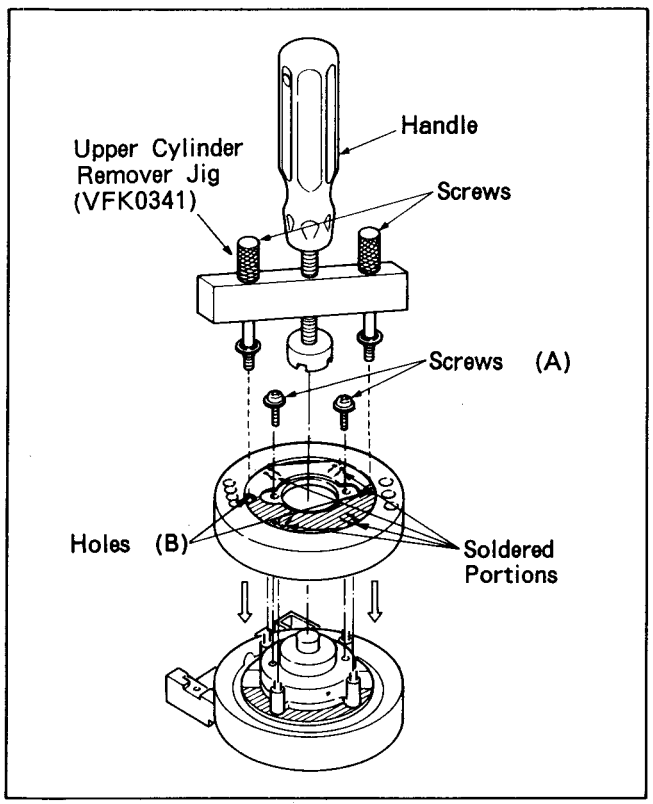

Fi g. T4 UPPER CYLINDER REMOVER (VFK0341)

NOTE:
1. This Upper Cylinder Remover also can be used for other conventional VHS video head cylinder.
2. Work with extreme care when removing or replacing the upper cylinder unit. Do not touch video heads during servicing.

4. CLEANING BRUSH FOR THE DIGITAL SCANNER

If the sensor in the tip of the Digital Scanner becomes clogged with dirt, it may become impossible to read the bar codes. Clean the tip from time to time with the supplied brush as illustrated below.
Keep this brush in the storage case of the Digital Scanner.

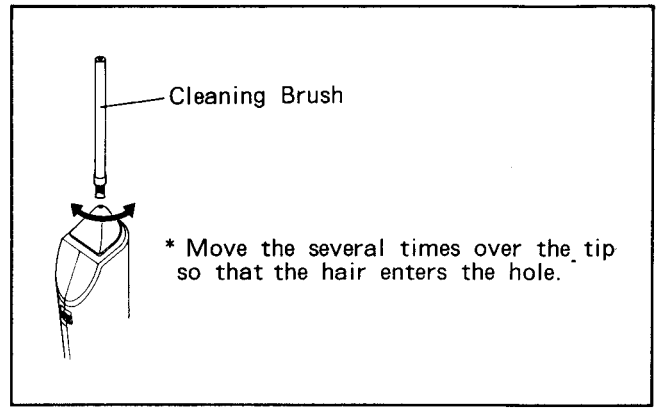

Fig. T5

SECTION 1
GENERAL DESCRIPTIONS

1-1. FEATURES

1. HQ (High Quality) Picture System
Video recorders carrying the HQ symbol mark feature the new VHS High Quality Picture System. This system assures complete compatibility with VTRs that use the conventional VHS system.

2. Multi-Function Display
Whenever an operation button is pressed, the activated function is immediately indicated on this easy-to-see display. It shows you at a glance, in what operation mode the VTR is functioning.

3. Programmable Remote Controller
In addition to letting you control all major VTR functions, this handy Remote Controller also lets you programme timer recordings from the comfort of your armchair.

4. LCD Digital Scanner
This Digital Scanner makes it possible to programme timer recordings by tracing the corresponding bar codes on the supplied Programming Sheet. The traced programming data can be confirmed on the built-in Bar Code Reader Display before they are transmitted to the VTR at the push of a button.

5. Reception of up to 99 TV Stations
The built-in tuner in this VTR allows pre-tuning of as many as 99 TV stations. So this VTR can accommodate virtually any increase in available TV programmes in the future.

6. Slim Design and Front Loading System
This highly functional design allows loading the video cassette from the front, thus minimizing the space required for the placement.

7. Auto Operation
The extremely convenient Auto Operation functions of this VTR include Auto Start and Auto Play when a recorded cassette is inserted, Auto Eject which indicates that an inserted cassette is not suitable for recording, VTR-Off Eject for ejecting a cassette even with the VTR off, and Auto Rewind at the end of a tape. If the VTR On/Off Switch is pressed during the rewind mode including Auto Rewind, the VTR will eject the cassette and turn itself off when rewinding is completed.

8. Picture Sharpness Control
With this control, the contours of the playback picture can be made sharper or softer.

9. Lap Time Counter
The new Lap Time Counter is a great improvement over the approximate counter systems of conventional VTRs. It gives you an exact reading of the elapsed tape time in hours, minutes and seconds, and makes it easy to calculate the tape time left on a cassette.

10. Super Still, Super Still Advance and Double Super Fine Slow Playback
Super Still, Super Still Advance and Double Super Fine Slow Playback are possible with superb picture quality free from noise and jitter.

11. Super OTR Function (One-Touch Timer Recording)
This convenient function makes it possible to easily programme the VTR for recording of TV programmes with immediate start or with start within 24 hours by precisely setting the starting time and ending time to the desired minute. When the recording ends, the VTR will automatically turn itself off.

12. 1-Month Calendar Timer
The clock/timer of the VTR is programmed with the calendar up to the end of 2002, so it knows exactly what day of the week it is on any given date. Programming of as many as 8 timer recordings is possible up to one month in advance.

13. VPS (Video Programme System) (NV-D48EG)
The Video Programme System is an extremely convenient system which assures that the TV programmes you have programmed for timer recording will be recorded exactly from beginning to end, even if the actual broadcasting time is different from the scheduled time.

14. Digital Special Effect
The special digital picture effects can be enjoyed by using the Remote Controller.

15. VHS Index Search System
With the Index Search function, up to 20 addresses (places where an index signal is recorded) can be skipped to directly locate the beginning of the desired programme in forward or reverse direction in the Fast Forward or Rewind mode.

16. Time Search
It is possible to locate the desired scene directly by inputting the hour, minute and second of that scene.

17. Digital Intro Scan Function

The Intro Scan function plays back one after another the first 10 seconds of each programme on a tape and keeps a still picture of the last 3 programmes on the right side of the screen. This is convenient for easy checking what programmes are on a tape and to quickly find a desired programme.

1-2. CONTROLS & COMPONENTS

FRONT

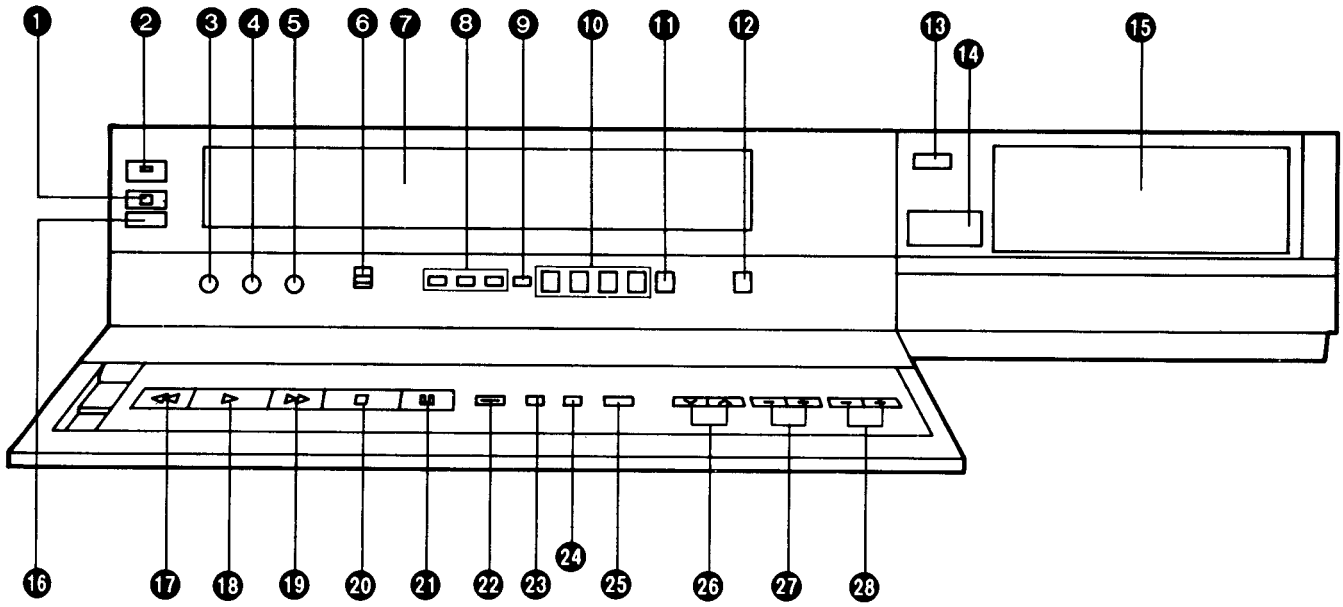

❶ Cassette-in Indicator

❷ VTR On/Off Switch with Indicator

❸ Tracking Control

❹ Slow Tracking Control

❺ Picture Sharpness Control

❻ Edit Switch

When the Dubbing (copying) from one video cassette to another VTR and receiving weak TV broadcasts from Tuner, the Edit Switch should be set to "On" position.

❼ Cassette Compartment

❽ Tuner Set-up Controls

The tuner in the VTR can be preset with up to 99 stations.

	VHF			UHF
	I	III	H	U
NV-D48EG	E2-E4	S4-E12	S11-S41	21-69
NV-D48B	—	—	—	21-69

❾ Clock Button

❿ Timer Controls

⓫ VPS Button (NV-D48EG)

⓬ Timer Record Button

⓭ Control Panel Open Button

⓮ Infra-red Remote Control Receiver Window

⓯ Multi-Function Display

⓰ Eject Button (⏏)

⓱ Rewind ◀◀/Review ⊟ Button

⓲ Play Button (▶)

⓳ Fast Forward ▶▶/Cue ⊟ Button

⓴ Stop Button (■)

㉑ Pause/Still Button (❚❚)

㉒ Record Button (●)

㉓ Memory/Search Button
When this button is pressed once, the Memory Indicator "M" will light up, and when it is pressed one more time, the Search Indicator "S" will appear instead. When it is pressed a third time the Search Indicator "S" will disappear.

㉔ Reset/Index Button

㉕ Euro AV Button (NV-D48EG)

㉖ Channel Selection Up and Down Buttons

㉗ OTR On Buttons

㉘ OTR Off Buttons

Multi-Function Display

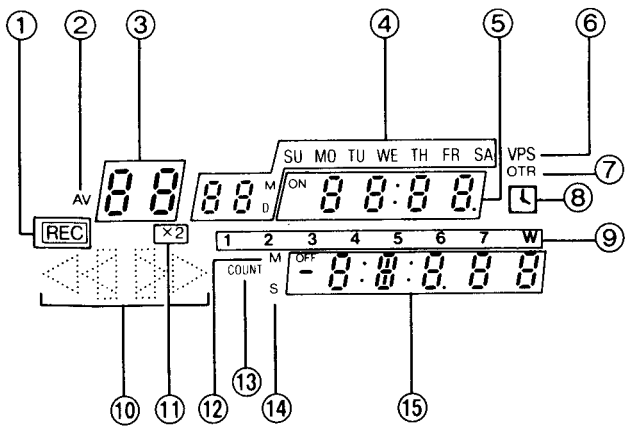

① Recording Indicator

② Euro AV Indicator (NV-D48EG)

③ Channel Display

④ Date Display

⑤ Clock Display

⑥ VPS Indicator (NV-D48EG)

⑦ OTR Indicator

⑧ Timer Recording Indicator

⑨ Timer Programme Number

⑩ Tape Running Display

⑪ Double Speed Indicator

⑫ Memory Indicator

⑬ Tape Counter Mode Indicator

⑭ Search Indicator

⑮ Lap Time Counter Display

REAR (NV-D48EG)

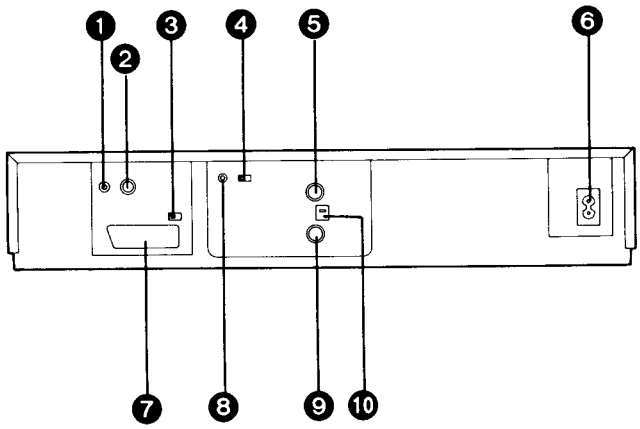

❶ Audio Input Socket

❷ Video Input Socket

❸ DBS Switch (NV-D48EG)

❹ Test Signal Switch

❺ RF Output Socket

❻ AC Mains Lead Socket

❼ Euro AV Socket

❽ Synchro Edit Socket

❾ RF Input Socket

REAR (NV-D48B)

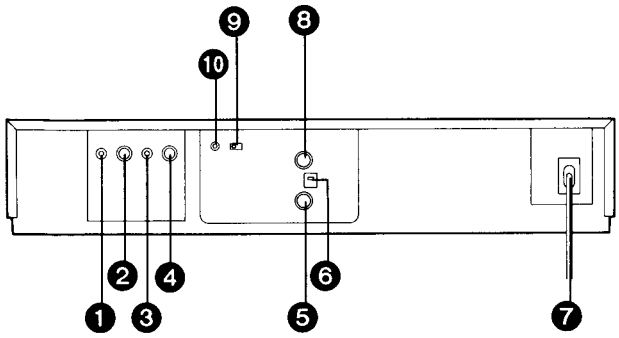

No.	Description
❶	Audio Input Socket
❷	Video Input Socket
❸	Audio Output Socket
❹	Video Output Socket
❺	RF Input Socket
❻	RF Signal Level Switch
❼	AC-IN Socket
❽	Video Playback Channel Selector
❾	RF Output Socket
❿	Test Signal Switch
⓫	Synchro Edit Socket

1-3. PROGRAMMABLE REMOTE CONTROLLER AND DIGITAL SCANNER

Part Number: VEQ0709 (NV-D48EG)
VEQ0710 (NV-D48B)

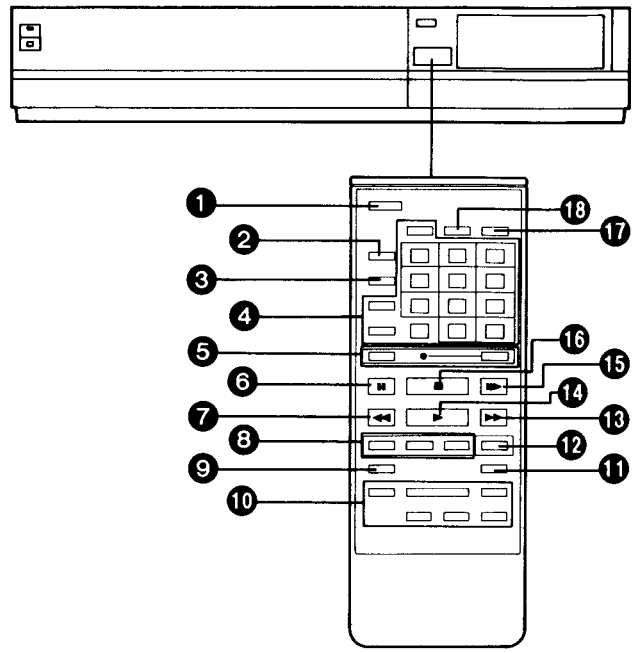

❶ **VTR On/Off Button**

❷ **Memory/Search Button**

❸ **Reset/Index Button**

❹ **Timer Recording & Programme Position Selector Buttons**

❺ **Record Buttons (●)**

❻ **Pause/Still Button (❚❚)**

❼ **Rewind ◀◀/Review ⊟ Button**

❽ **Slow Buttons**

❾ **Reverse Play Button**

❿ **Digital Function Buttons**

⓫ **Intro Scan Button**

⓬ **Double Speed Playback Button (×2)**

⓭ **Fast Forward ▶▶/Cue ⊟ Button**

⓮ **Play Button (▶)**

⓯ **Still Advance Button (❚▶)**

⓰ **Stop Button (■)**

⓱ **Time Search Button**

⓲ **+/− Button**

Part Number: VEQ0691 (NV-D48EG)
VEQ0692 (NV-D48B)

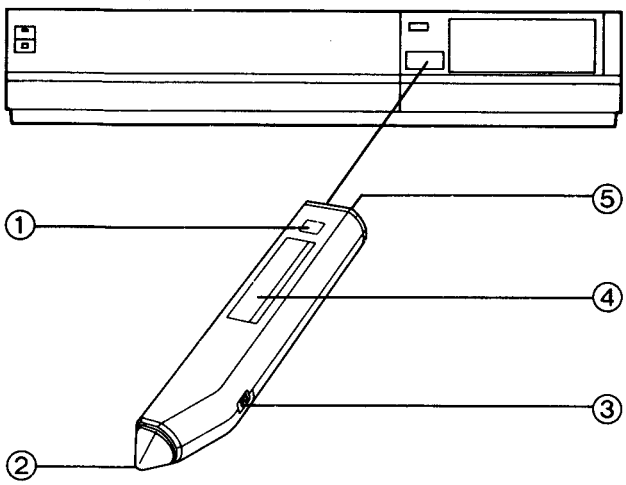

① **Transmit Button**

② **Bar Code Reading Section**

③ **Digital Scanner On/Off Switch**

④ **Bar Code Reader Display**

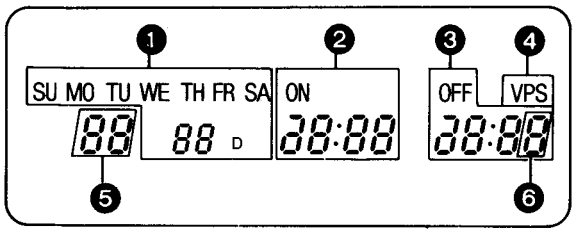

❶ Date Display

❷ Start Time Display

❸ End Time Display

❹ VPS Indicator (NV-D48EG)

❺ Channel Display

❻ Check Indicator

⑤ **Transmitting Section**

How to Operate the Digital Scanner

Set the digital Scanner On/Off Switch to "ON".

- If no operation is performed for more than 25 seconds, the scanner will automatically switch over to the power-saving standby condition and the lamp will go off. (In this case, if bar codes have already been read but not yet transmitted to the VTR, the data will be cancelled.)
- When the Digital Scanner On/Off Switch is set to "ON" but the lamp is not lit, set the switch to "OFF" and then to "ON" again.

Tracing the Bar Codes

Ⓐ Place the Digital Scanner vertically on the Small Box.

Ⓑ Trace the bar code quickly in the direction of the arrow.

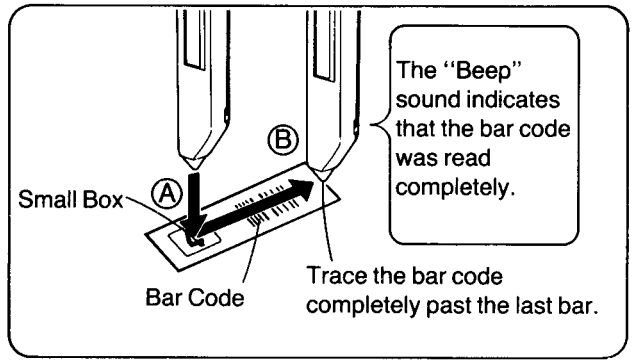

Multi-Language Instruction Stickers

To facilitate the use of the Programming Sheet, select the stickers with the instructions in your own language and attach them on the English indications on the Programming Sheet.

Cleaning Brush for the Digital Scanner

If the sensor in the tip of the Digital Scanner becomes clogged with dirt, it may become impossible to read the bar codes. Clean the tip from time to time with the supplied brush as illustrated below.
Keep this brush in the storage case of the Digital Scanner.

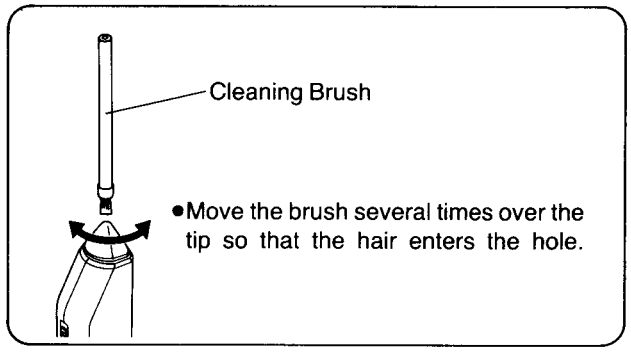

- Treat the Programming Sheet with care. If the sheet gets dirty or scratched, the bar code reading may become impossible.
- Protect the Digital Scanner from strong shocks and vibration. Keep it away from water and places with high temperature and humidity.
- If the bar code is traced slowly, it cannot be read correctly.
- When there is no "Beep" sound, the reading of the bar code is incomplete. Trace the bar code again.
- When using the Programming Sheet, put it on flat surface. Reading the bar codes while holding it in your hand or bending it, may result in incorrect operation.
- Do not deviate from the bar code, nor stop tracing halfway.
- Do not slant the scanner to trace the bar code.

Note:
- The infra-red beam should be transmitted directly at the Infra-red Remote Control Receiver on the front of the VTR.
- Direct sunlight may interfere with the beam.
- The lightsensing angle of the Infra-red Remote Control Receiver window in the VTR is about 60°.
- The unit should be used within a range of about 7 meters from the front of the VTR.

Recommendation
To save battery power, make sure to set the Digital Scanner On/Off Switch to "OFF" after using the Digital Scanner. When the batteries are exhausted, the bar code reading can no longer be performed.

1-4. DIGITAL SPECIAL EFFECTS

The special digital picture effects can be enjoyed by using the Remote Controller.

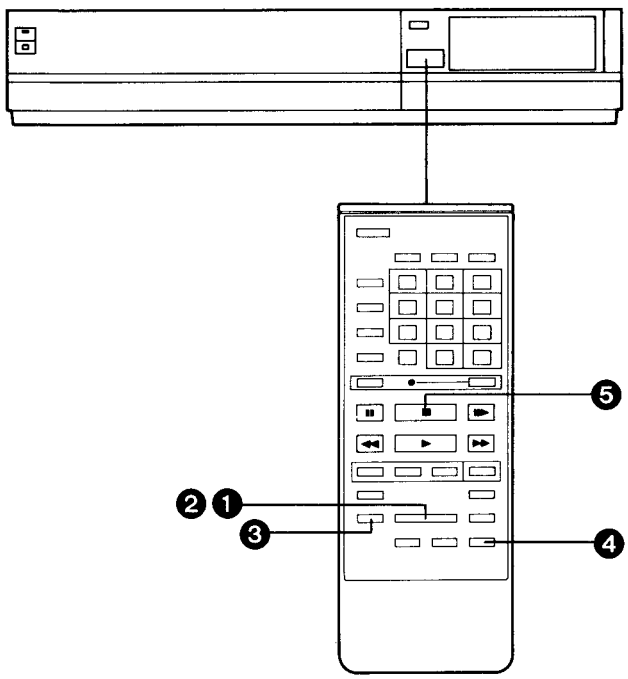

Picture-in-Picture

This function makes it possible to watch a TV programme while playing back a tape.
- The Picture-in-Picture function works in any of the playback functions: normal playback, Cue, Review, Still and Slow.

❶ When the "P inP" Button is pressed during playback of a tape, a small picture of the TV channel selected on the VTR appears in the bottom right corner of the screen.
- Only the sound of the large picture is reproduced.

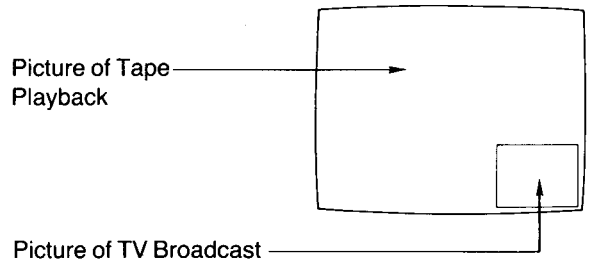

- The TV channel can be changed with the Programme Position Selector Buttons either on the Remote Controller or on the VTR itself.

❷ By pressing the "P in P" Button repeatedly, the position of the small picture can be changed as follows.

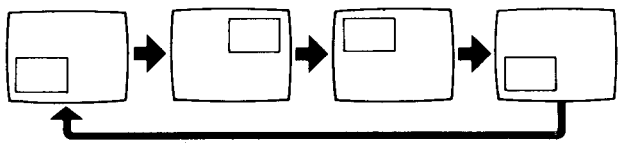

❸ By pressing the ◻/■ Button, the large picture can be changed into the small one and vice versa.
- Depending on the TV set used, there may be some momentary picture distortion when they are exchanged.

❹ To return to the normal (single-picture) playback, press the CLEAR Button.

❺ To watch the TV broadcast alone on the whole screen, press the STOP Button.

- When the 3-SCREEN Button is pressed during the Picture-in-Picture playback, the small picture will be displayed in the 3-Screen Multi Select mode.
- When the F. STORE Button is pressed during the Picture-in-Picture playback, the small picture will be displayed in the ¼-Screen Frame Store mode.

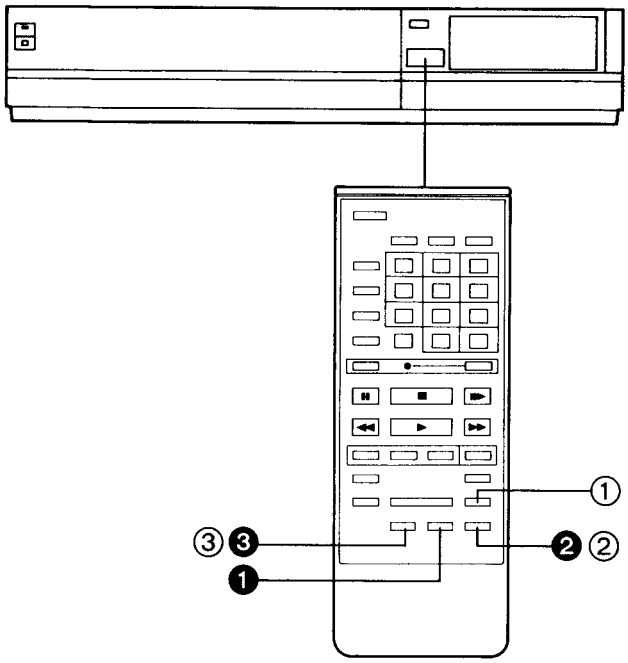

1/4-Screen Frame Store

This function can be used to freeze the action at any desired moment and superimpose it as a still picture in ¼-screen size onto the moving playback picture. The reproduction of the sound of the moving picture (full screen) will continue normally. In addition to the playback of video tapes, this ¼-Screen Frame Store function can also be used for TV broadcasts (received with the TV tuner in the VTR) as well as for pictures input from an external source.

❶ When the F. STORE Button is pressed, a still-picture of that moment's action will appear in the bottom right quarter of the screen.

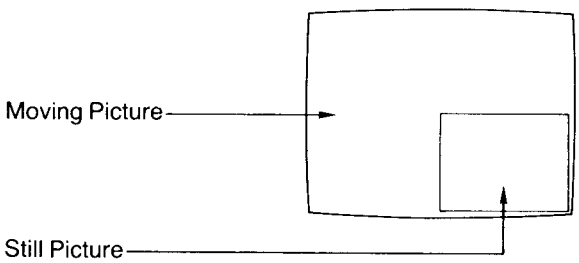

- Every time the F. STORE Button is pressed, the moving picture of that moment will be displayed as a still-picture.
- When this button is kept pressed, still pictures taken at half-second intervals will be displayed for a strobe-like effect.

❷ To return to the former condition (single-picture playback or TV broadcast), press the CLEAR Button.

❸ If the RECALL Button is pressed, the screen will return to the condition before the CLEAR Button was pressed.

3-Screen Multi Select

① When the 3-SCREEN Button is pressed, three small pictures frames will appear on the right side of the screen and can be filled with still-pictures from top to bottom.

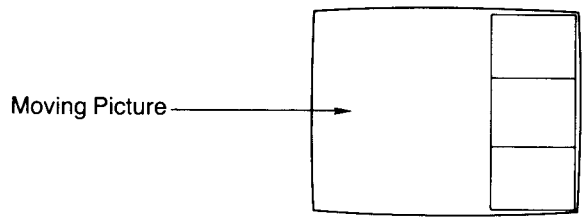

- Press the 3-SCREEN Button successively at the scenes which you want to display as still-pictures. The still-pictures will be displayed and updated from top to botton.
- When this button is kept pressed, the still-pictures will be displayed in 0.3-second intervals.

② To return to the former condition (single-picture playback or TV broadcast), press the CLEAR Button.

③ If the RECALL Button is pressed, the screen will return to the condition before the CLEAR Button was pressed.

- When "S" Mark in the Multi-Function Display is lit, the digital function buttons cannot be operated. If you want to use the Digital Functions, press the Memory/Search button (the "S" Mark will disappear).
- NV-D48EG model only
  The digital special effects cannot be used for SECAM (OST) signals.

About the Superimposed Small Pictures

- The picture may vibrate vertically, be distorted and the colour may be unstable. However, this is not due to any malfunction.
- Depending on the type of TV set used, the small pictures may not display the full picture content.
- When the moving picture is in black-and-white, the small pictures are also in black-and white.
- When the special playback signals (Cue, Review, Still, Slow etc.) are being input from another VTR, the small picture may be distorted.

1-5. DIGITAL INTRO SCAN FUNCTION

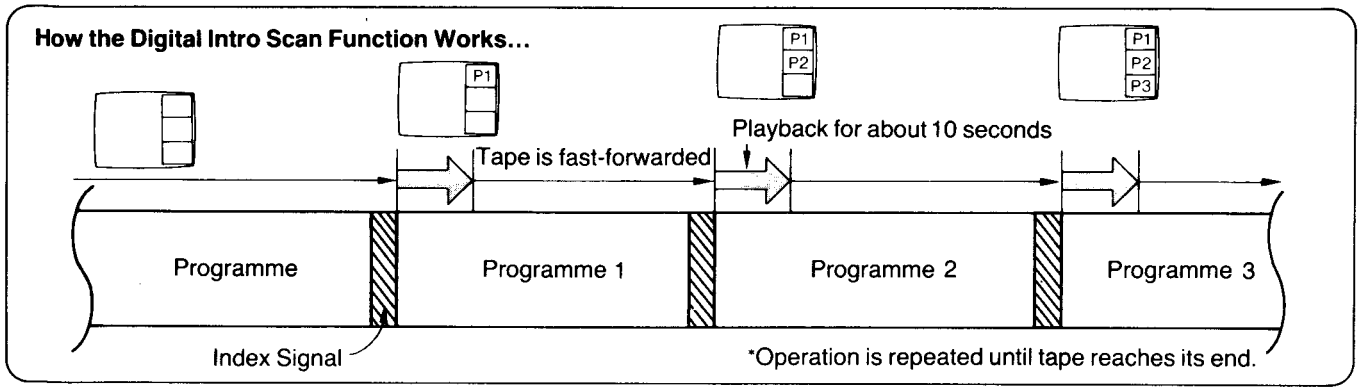

The Intro Scan function plays back the first 10 seconds of each programme (marked by an index signal) on a tape one after another on the full screen. The first picture of each of these 10-second segments is then frozen and displayed as a still-picture in the 3-Screen Multi Select mode on the right side of the TV screen from the top to the bottom.

Convenient Digital Intro Scan Operation with the Remote Controller

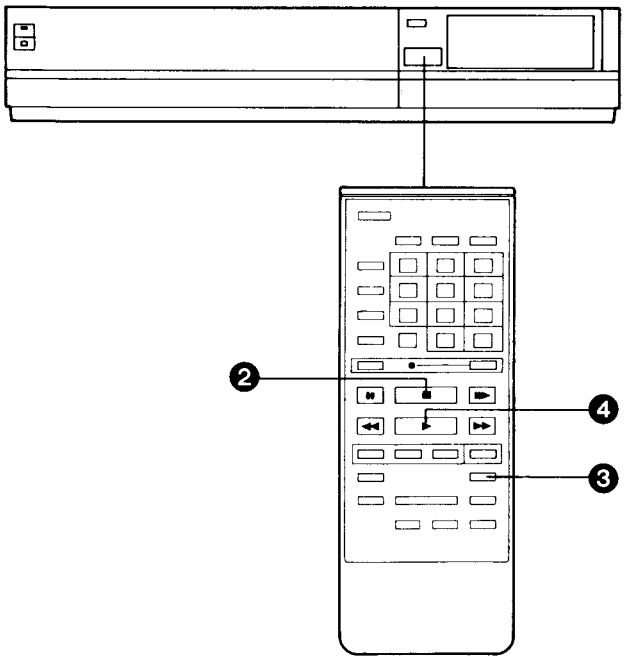

❶ Insert a video cassette on which index signals are recorded.

❷ Put the VTR in the stop mode or the still playback mode.

❸ Press the Intro Scan Button.
(The blank three small pictures will appear on the right of the screen, "S" mark will light up in the Multi-Function Display, and the Digital Intro Scan will start.)

❹ When the desired scene is reached, press the Play Button.
- If you want to use the Digital Function after that, press the Memory/Search Button (the "S" Mark will disappear).

Digital Intro Scan Operation on the VTR

① Insert a video cassette.
(Put the VTR in the stop mode.)

② Press the Memory/Search Button twice.
(The blank three small picture appears on the right of the screen and "S" mark appears.)

③ Press the Fast Forward ▶▶/Cue ⊡ Button.
(The Intro Scan starts.)

④ When the desired scene is reached, press the Play Button.
- If you want to use the Digital Function after that, press the Memory/Search Button (the "S" Mark will disappear).

- The Intro Scan function may not be activated for the first programme recorded close to the beginning of the tape.
- During the Intro Scan, if there is a portion without any recording on the tape, the Intro Scan function will be activated at that position to play back the tape for about 10 seconds, and the Intro Scan will then continue.
- The Intro Scan function may not be activated, if the interval between programme starts is less than 2 minutes.
- If a portion without any recording on the tape continues for more than about 50 minutes, the Intro Scan function will be cancelled and the playback will start.

- During the Digital Intro Scan, if there is no input signal, the VTR will automatically be in same condition as the Test Signal Switch is "ON" and the small pictures will be in black-and- white.

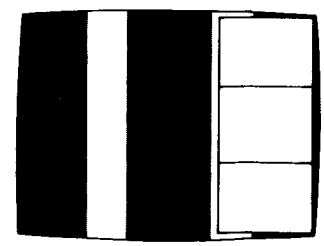

1-6. VHS INDEX SEARCH SYSTEM

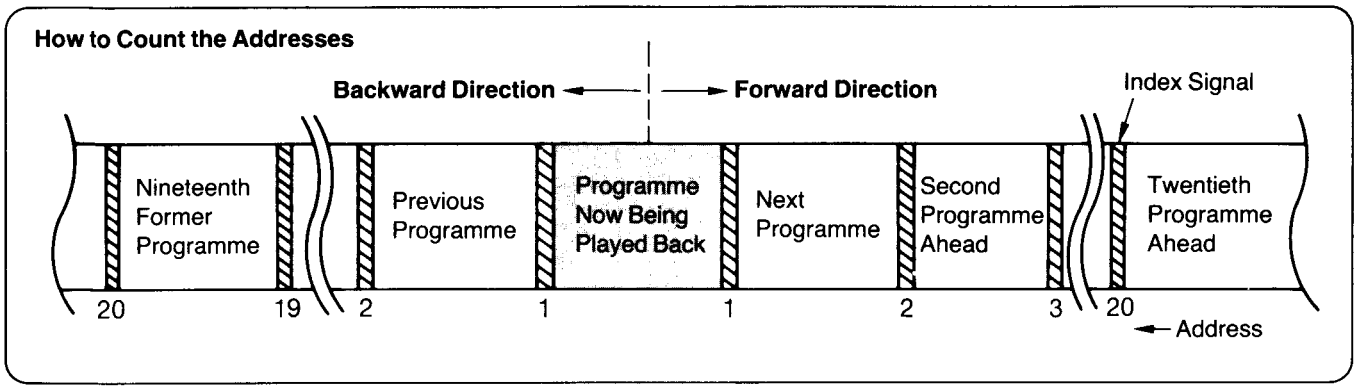

With the Index Search function, up to 20 addresses (places where an index signal is recorded) can be skipped to directly locate the beginning of the desired programme in forward or reverse direction in the Fast Forward or Rewind mode.

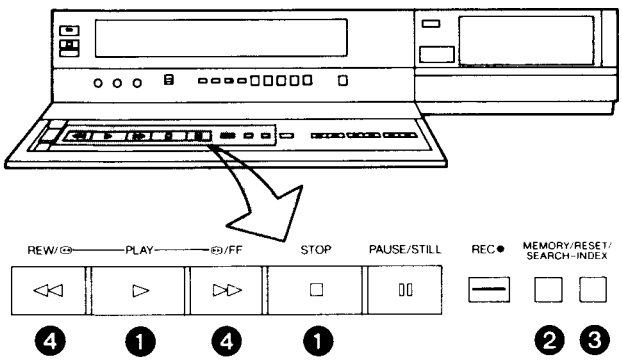

A special index signal (for use of the VHS Index Search function) is automatically recorded every time the Record Button is pressed. If you want to record an additional index signal during the recording of a programme, press the Record Button again at the desired point.

1. Press the Play Button (▶) or Stop Button (■).
2. Press the Memory/Search Button twice.
   - The indication "S" appears on the Multi-Function Display.
3. Repeatedly press the Reset/Index Button to select the desired address.
   The number of the selected address is shown on the Multi-Function Display.

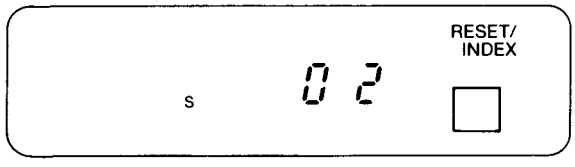

4. Press the Rewind ◀◀/Review ⊟ or Fast Forward ▶▶/Cue ⊟ Button to start the VHS Index Search function (the VTR will switch to the rewind or fast-forward mode).

- Every time an index signal (address) is skipped the number in the Address Indication decreases by one.
- When the preset address is reached, the Tape Counter Indication will appear in place of the Address Indication, and the normal playback will start.
- To abort the Index Search function midway, press the Play or the Stop Button.

- If the recording is stopped temporarily by pressing the Pause Button and is later resumed, no index signal will be recorded at that position.
- It is impossible to record only index signals onto a tape that has already been recorded.
- If a tape position without any recording is passed during the Index Search function, that position may be counted as an address.
- The Index Search function can only count the addresses correctly, if the index signals are spaced at least 2 minutes.
- If the Index Search function is started extremely close to the beginning of the next programme (address) or from the beginning of the tape, the first address may not be counted.
- If you want to use the Digital Function after searching desired programme, press the Memory/ Search Button (the "S" Mark will disappear).

1-7. TIME SEARCH

It is possible to locate the desired scene directly by inputting the hour, minute and second of that scene.

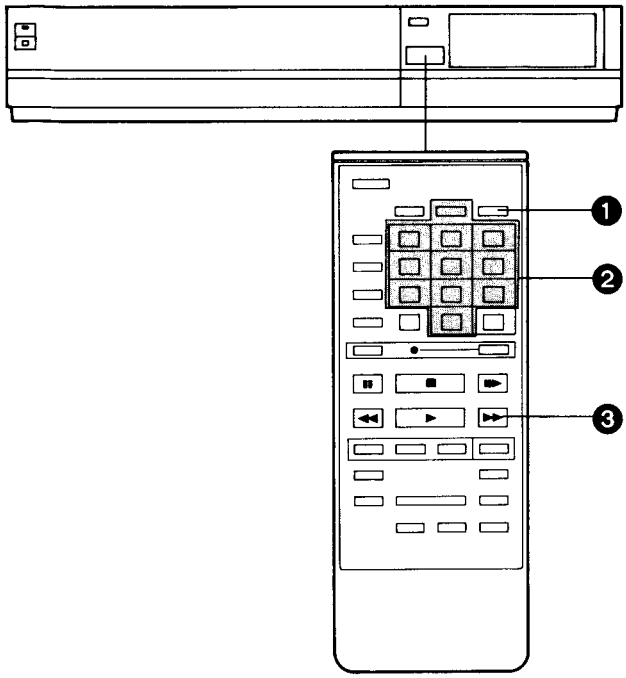

Put the VTR in Stop mode.

❶ Press the Time Search Button.
The indication in the Multi-Function Display changes as shown below.

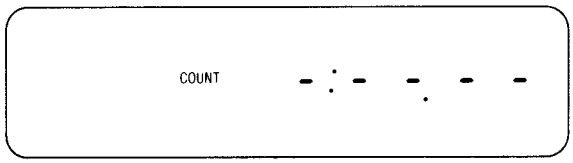

❷ Input the time of the desired scene.
- The time is input by pressing the number buttons in the order: hour, minute, second.
- The "–" indicatioin will be counted as "0".
- If you want to input an earlier time than "0:00.00", press the +/– Button so that the "–" indication appears ahead of the counter indication.

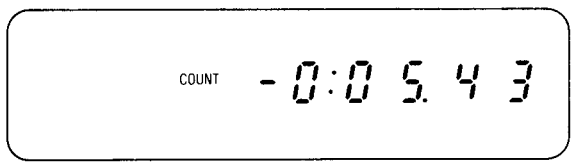

❸ Press the Fast Forward ▶▶/Cue ⊡ Button.
- The VTR automatically judges whether the tape should be fast-forward or rewound and performs the appropriate operation.
- When the designated time is reached, the playback starts.

- The numbers in the Tape Counter do not change during parts of the tape on which there is no recording.
- When the tape is ejected, the Tape Counter will automatically be reset to "0:00.00".

SECTION 2
ADJUSTMENT PROCEDURES

2-1. MECHANICAL ADJUSTMENT PROCEDURES

This Mechanical Chassis of these models NV-D48EG/B is the same as G Mechanical Chassis.
Therefore please refer to the Service Manual G Mechanical Chassis (Order No. VRD8701105).

2-2. DISASSEMBLY METHOD

2-2-1. DISASSEMBLY FLOW CHART

This flowchart indicates disassembly steps of the cabinet parts and the circuit boards in order to find the necessary items for servicing.
When reassembling, perform the steps in the reverse order.

NOTE:
When removing the Front Panel, be careful to avoid any damages for the locking portions of the panel.

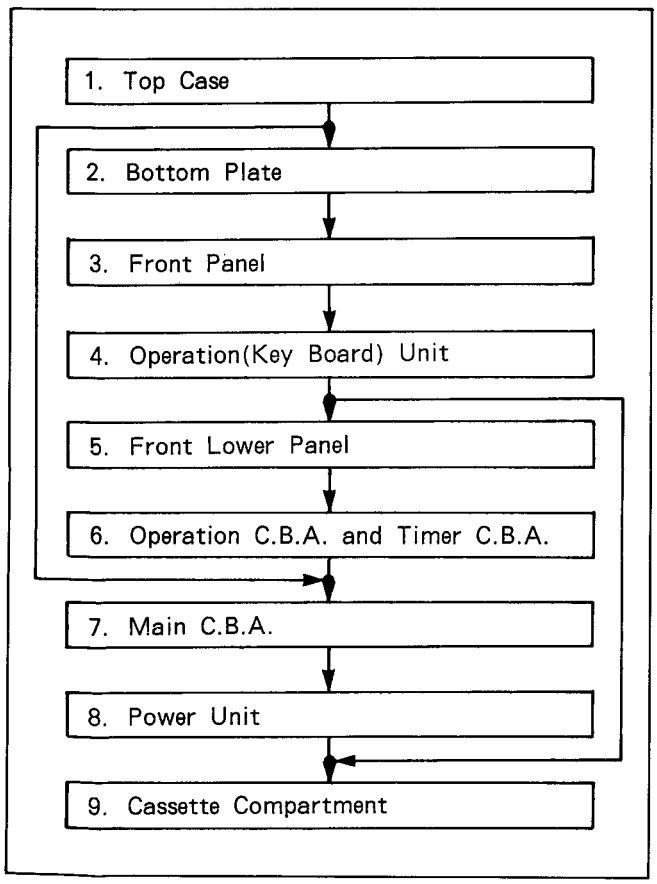

Fig. D1

2-2-2. DETAIL OF DISASSEMBLY METHOD

1.REMOVAL OF THE TOP CASE
Remove the 4 screws (A), then carefully lift the rear of the Top Case to remove.

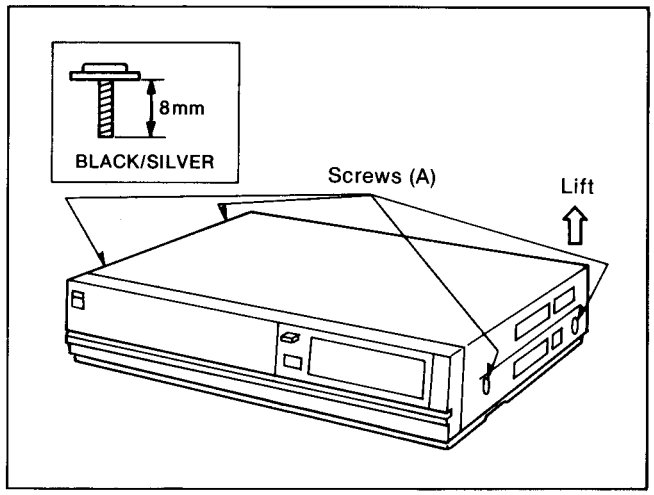

Fig. D2

2.REMOVAL OF THE BOTTOM PLATE
Place the deck upside down so that the bottomside faces upward.
Then remove the 8 screws (B).

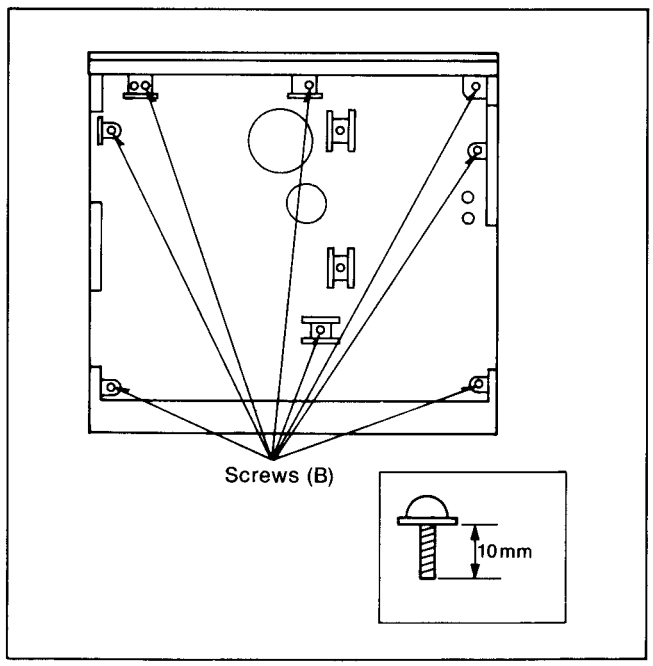

Fig. D3

NOTE:
Place the cushion under the deck to avoid any damages.

3.REMOVAL OF THE FRONT PANEL

Open the Operation(Key Board) Unit and remove the screw (C) and unlock the 5 locking portions (D). Then hold the top portion of the panel and turn it toward the front side of the deck to remove.

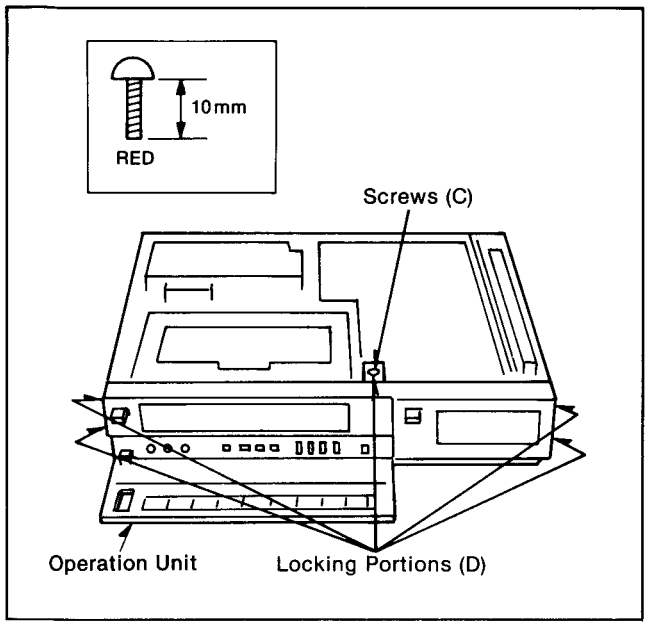

Fig. D4

NOTE:
Place the cushion under the deck to avoid any damages.

4.REMOVAL OF THE OPERATION (KEY BOARD) UNIT

Remove the screw (E).
Disconnect the connector P7504 (F) and remove the flexible wire. Then carefully remove the Operation (Key Board) Unit.

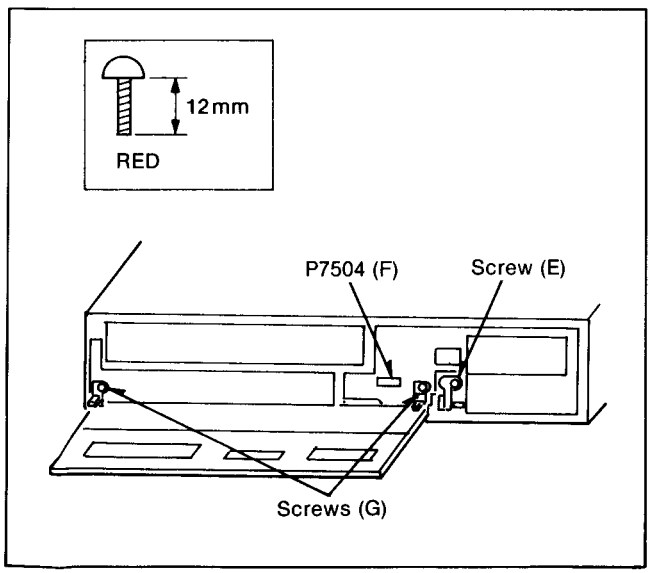

Fig. D5

5. REMOVAL OF THE FRONT LOWER PANEL

Place the deck upside down so that the bottomside faces upward.
Then remove the screws (G) and unlock the 3 locking portions (H).

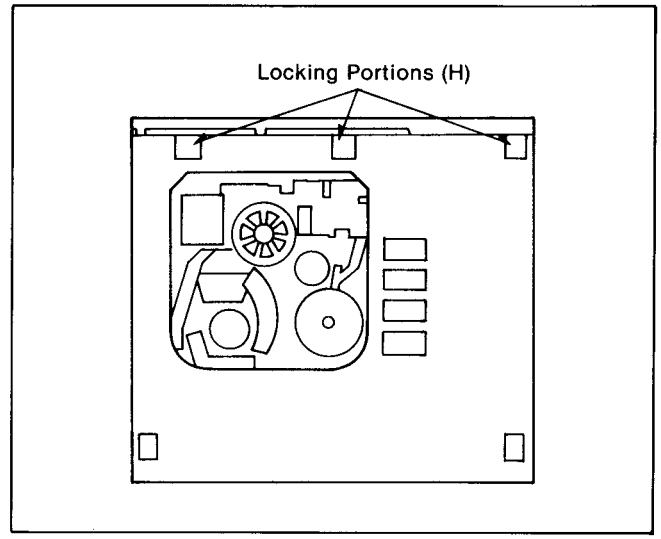

Fig. D6

NOTE:
Place the cushion under the deck to avoid any damages.

6.REMOVAL OF THE OPERATION C.B.A. AND TIMER C.B.A.

Remove the 4 screws (I) and unlock the 4 locking portions (J).

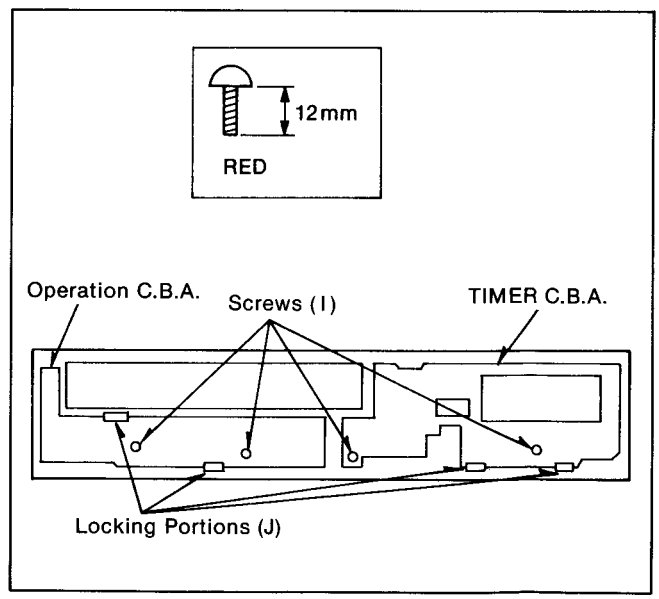

Fig. D7

7. REMOVAL OF THE MAIN C.B.A.

Remove the 6 screws (K) and take out the Main C.B.A. Puttong it up right position on the flame can be available as shown in Fig. D9.

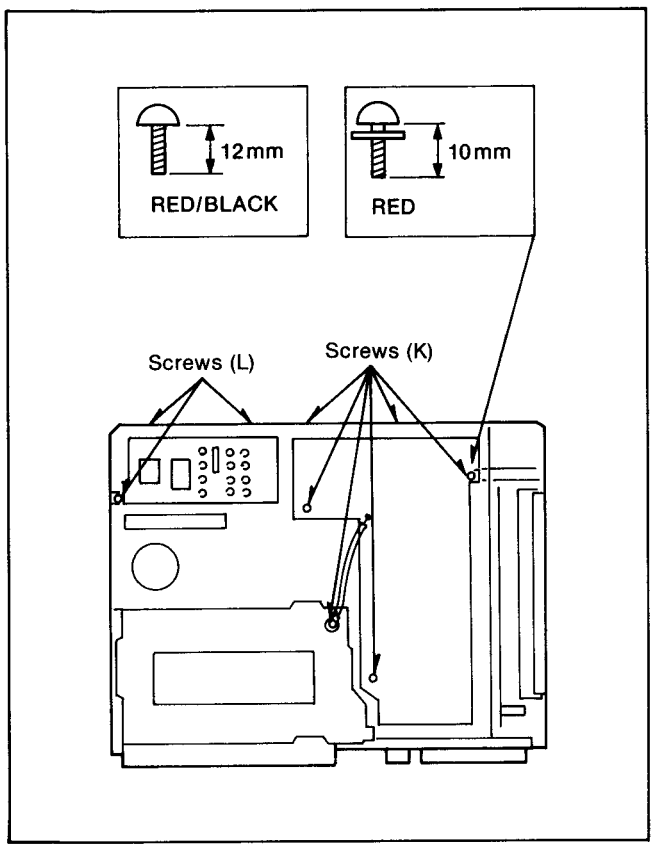

Fig. D8

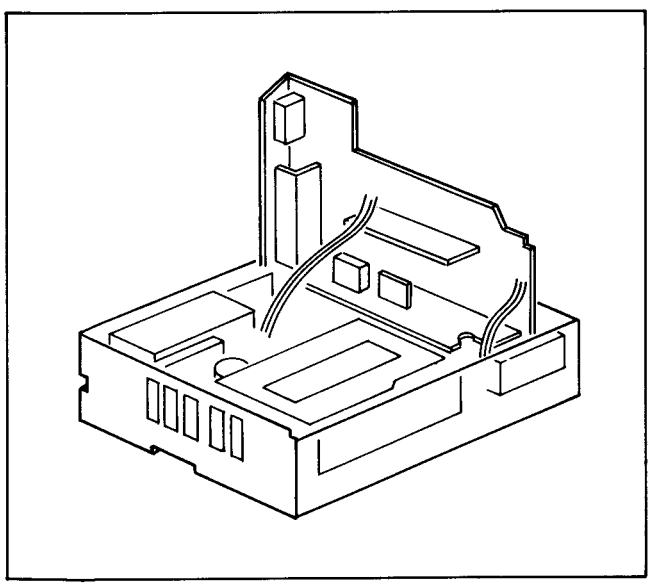

Fig. D9

8. REMOVAL OF THE POWER UNIT

Remove the 3 screws (L) and take it out from the Main C.B.A. as shown in Fig. D8.
Remove the shield case then checking can be performed.

9. REMOVAL OF THE DIGITAL UNIT

Remove the 2 screws (M) and lift it.
Remove the shield case then checking can be performed.

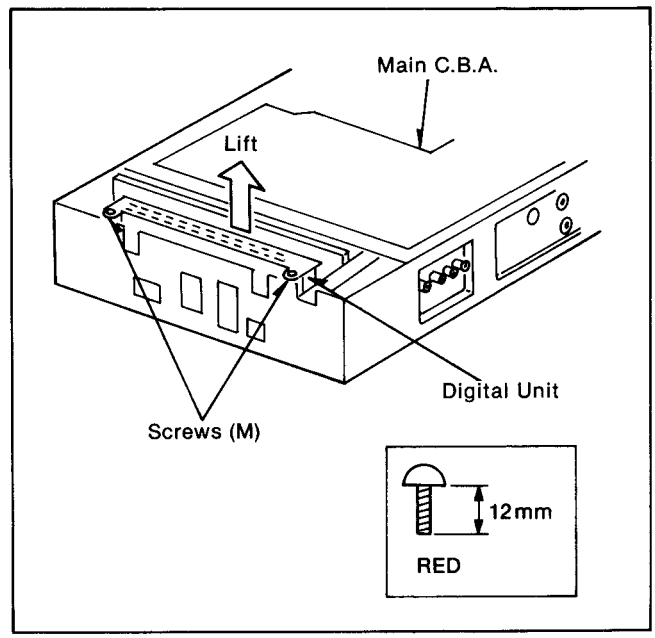

Fig. D10

10. REMOVAL OF THE CASSETTE COMPARTMENT

Remove the 3 screws (N).
Slide the cassette holder until appearing 2 screws (O) by turning (clockwise) the Capstan Rotor Unit (located in the bottom side as shown in Fig. D12 and remove the 2 screws (O).
Remove the flexible cable from connector P1503 mounted on Take-up Photo Tr. C.B.A. , then carefully pull out the Cassette Compartment.

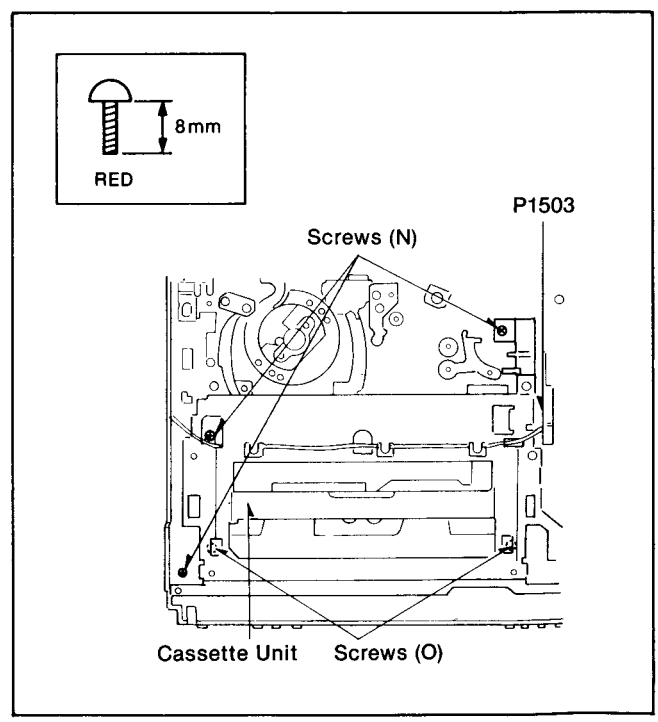

Fig. D11

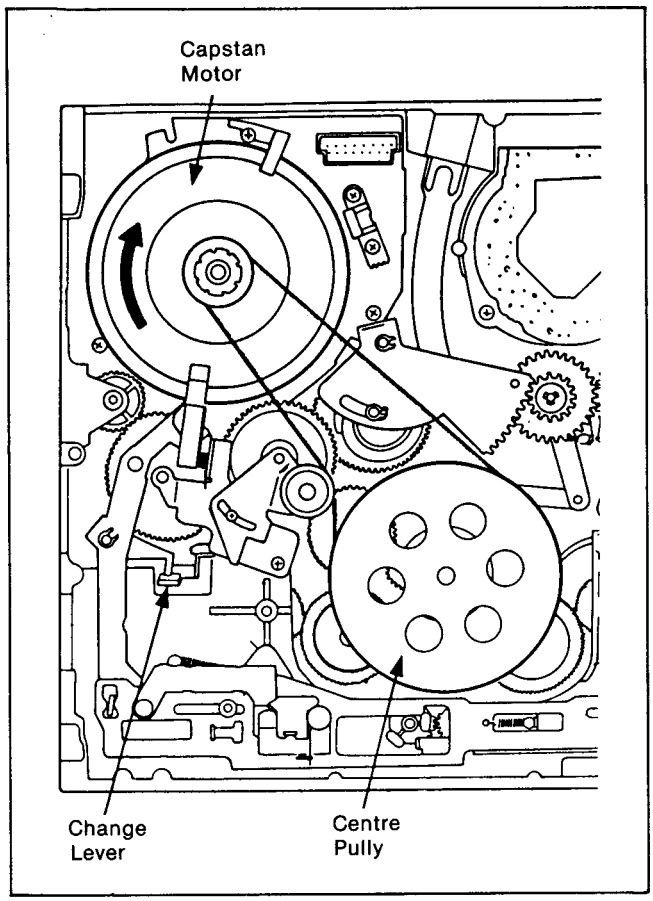

Fig. D12

NOTE:
When reinstalling the Cassette Compartment, mechanical adjustment (alignment) must be performed for correct working refer to Service Manual (G Mechanical Chassis) (Order No. VRD8701105, item 3-10. mechanical adjustment (alignment)).

2-3. ELECTRICAL ADJUSTMENT PROCEDURES

This section provides complete electrical adjustment procedures which may be required for electronic circuits of VHS Video Cassette Recorder NV-D48EG/B.

2-3-1. TEST EQUIPMENTS

To perform the electrical adjustments completely, following equipments are required.

1. VTVM (Vacuum Tube Volt Meter) or DVM (Digital Volt Meter)
   Voltage Range: 0.001~50V
2. Dual-Trace Oscilloscope
   Voltage Range: 0.005~50V/div.
   Frequency Range: DC~30MHz
   Probes: 10:1 or 1:1
3. Frequency Counter
   Frequency Range: 0~10MHz
4. Signal Generator (Sinewave)
   Frequency Range: 0~500KHz
5. Video Sweep Generator
   Frequency Range: 0~10MHz
6. Colour Monitor TV
7. Plastic Tip Driver
8. VHS Alignment Tape (VFJ8125H3F)

2-3-2. HOW TO READ THE ADJUSTMENT PROCEDURES

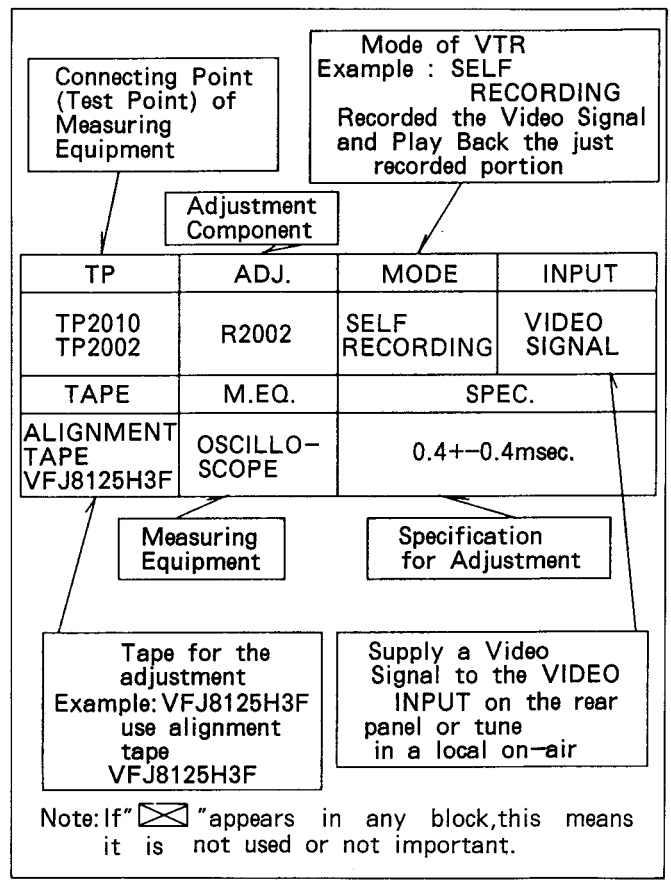

Fig.E1

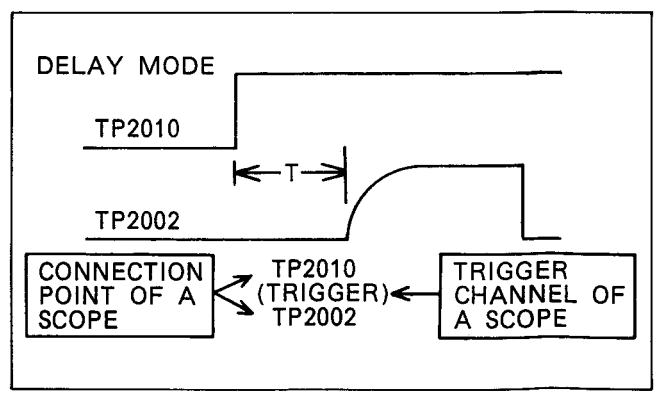

Fig.E2

SERVO SECTION

2-3-3. PG SHIFTER ADJUSTMENT

TP	ADJ.	MODE	INPUT
TP2001 TP3002	VR2001	PLAY	
TAPE	M.EQ.	SPEC.	
ALIGNMENT TAPE VFJ8125H3F	OSCILLO-SCOPE	6.5+−0.5H	

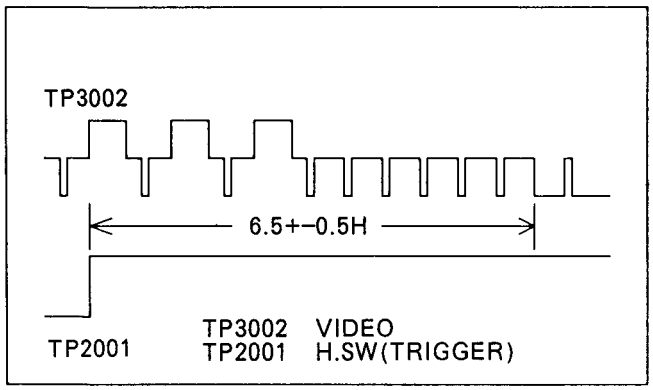

Fig.E3

2-3-4. TRACKING FIX ADJUSTMENT

TP	ADJ.	MODE	INPUT
TP2001 TP2002	VR2002	SELF RECORDING	VIDEO SIGNAL
TAPE	M.EQ.	SPEC.	
BLANK TAPE	OSCILLO-SCOPE	T=1.6+−0.4msec.	

1. TRACKING VR is in centre fix postiion.
2. Record the video signal.
3. Playback the just recorded poriton.
4. Adjust the VR2002 so that the period of "T" becomes 1.6+−0.4msec. as shown in below.

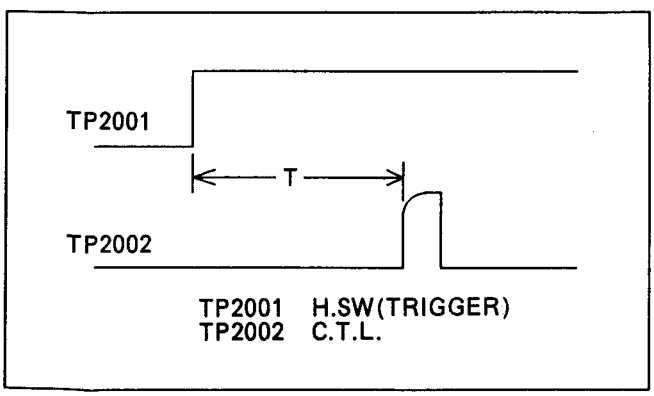

Fig.E4

2-3-5. SLOW TRACKING ADJUSTMENT

TP	ADJ.	MODE	INPUT
TP2026 TP2002	VR2011	SLOW	VIDEO SIGNAL
TAPE	M.EQ.	SPEC.	
BLANK TAPE	OSCILLO-SCOPE	T=17.5+−2msec.	

1. SLOW TRACKING VR is centre fix position.
2. Playback the just recorded portion in SLOW mode.
3. Adjust the VR2011 for 17.5+−2msec. as shown in Fig. E5.

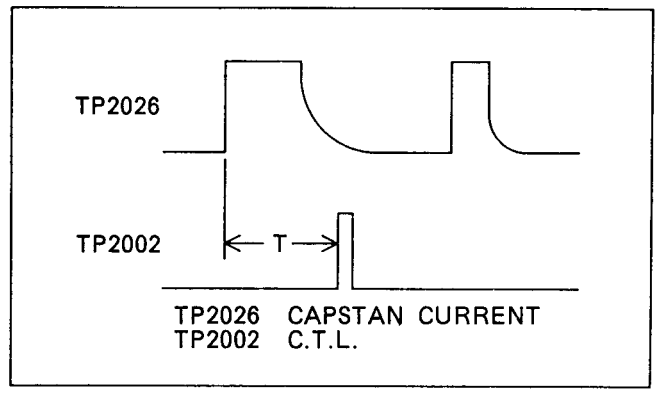

Fig.E5

2-3-6. SLOW FREE RUN ADJUSTMENT

TP	ADJ.	MODE	INPUT
TP2015	VR2013	STILL	VIDEO SIGNAL
TAPE	M.EQ.	SPEC.	
BLANK TAPE	FREQUENCY COUNTER	453+−15Hz	

1. Record the video signal and playback the tape just recorded. Then place the unit in STILL mode.
2. Connect a jumper wire between TP2025 and GND.
3. Connect a jumper wire between TP2026 and GND.
4. Connect the frequency counter to TP2015.
5. Adjust the VR2013 so that the frequency is 453+−15Hz.

2-3-7. ARTIFICIAL V-SYNC ADJUSTMENT

TP	ADJ.	MODE	INPUT
	VR2010	SELF RECORDING	VIDEO SIGNAL
TAPE	M.EQ.	SPEC.	
BLANK TAPE	TV MONITOR		

1. Playback the just recorded portion and place the deck in STILL mode.
2. Adjust the VR 2010 so that tha V-dancing does not appear on the TV monitor screen.

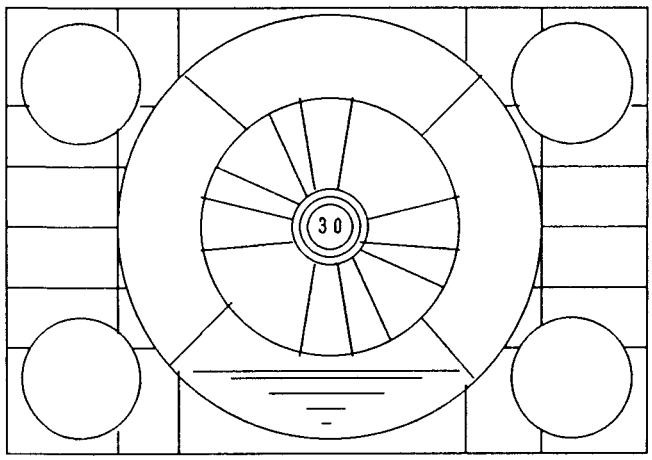

Fig.E6

LUMINANCE, CHROMINANCE & HEAD AMP SECTION

2-3-8. LUMINANCE RECORDING CURRENT ADJUSTMENT

TP	ADJ.	MODE	INPUT
TP503 (HOT) TP504 (GND)	VR501	RECORDING	VIDEO SIGNAL
TAPE	M.EQ.	SPEC.	
BLANK TAPE	OSCILLO-SCOPE	130+-5mVp-p	

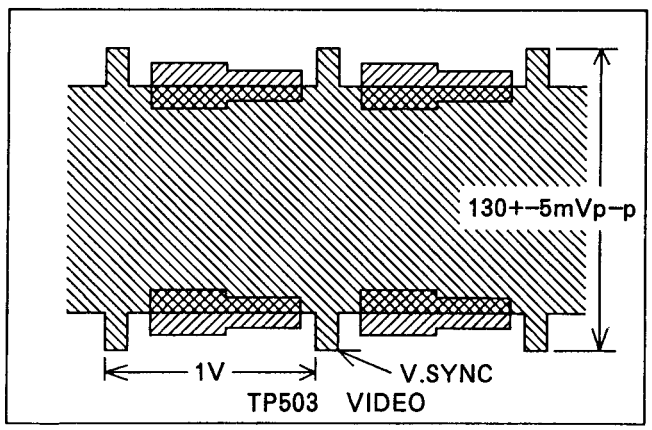

Fig.E7

2-3-9. CHROMINANCE RECORDING CURRENT ADJUSTMENT

TP	ADJ.	MODE	INPUT
TP503(HOT) TP504(GND)	VR502	RECORDING	VIDEO SIGNAL
TAPE	M.EQ.	SPEC.	
BLANK TAPE	OSCILLO-SCOPE	32+-3mVp-p	

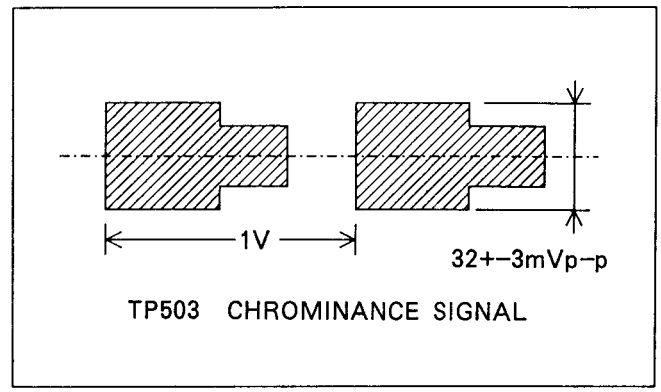

Fig.E8

2-3-10. PLAYBACK CHROMA CYAN LEVEL ADJUSTMENT

TP	ADJ.	MODE	INPUT
TP3002 (VIDEO OUT)	VR803	SELF RECORDING	VIDEO SIGNAL
TAPE	M.EQ.	SPEC.	
BLANK TAPE	OSCILLO-SCOPE	0.55+-0.05Vp-p	

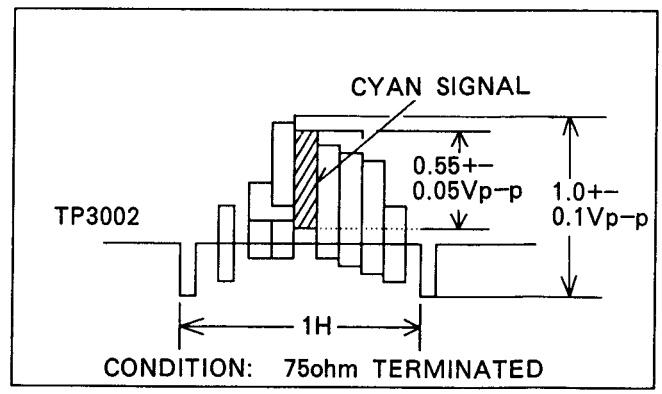

Fig.E9

2-3-11. HEAD AMP FREQUENCY RESPONSE ADJUSTMENT

TP	ADJ.	MODE	INPUT
TP3002 (VIDEO OUT)	VR3012	SELF RECORDING	VIDEO SWEEP
TAPE	M.EQ.	SPEC.	
BLANK TAPE	VIDEO SWEEP/ OSCILLO-SCOPE		

1. Set the sweep generator output as shown in below.

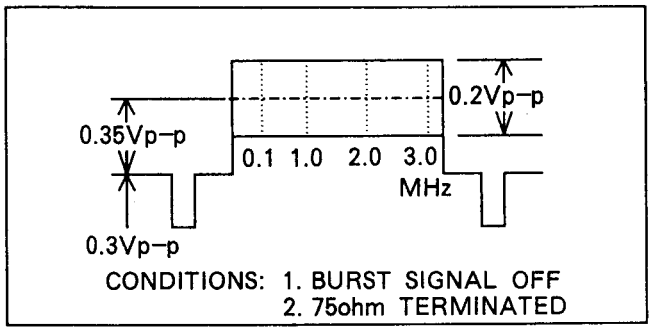

Fig.E10

2. PICTURE VR is centre fix position.
3. Adjust the VR3012 so that the waveform becomes as shown in below.

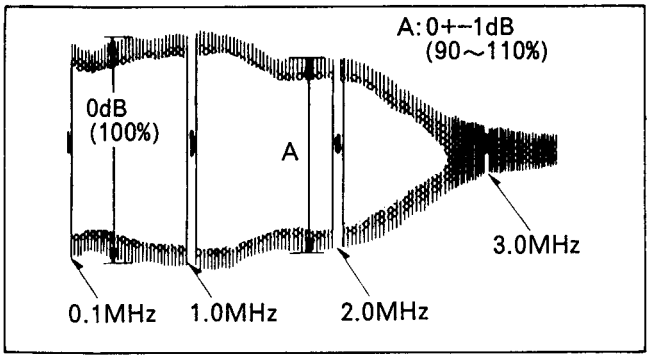

Fig.E11

2-3-12. Y-NR BALANCE ADJUSTMENT

TP	ADJ.	MODE	INPUT
IC301-9	VR302	SELF RECORDING	VIDEO SIGNAL (COLOUR BAR)
TAPE	M.EQ.	SPEC.	
BLANK TAPE	OSCILLO-SCOPE	WAVEFORM IS MINIMIZED	

1. Connect the oscilloscope to Pin9 of IC301 on the Luminance & Chrominance Pack C.B.A.
2. Adjust the VR302 so that the waveform is minimized as shown in below.

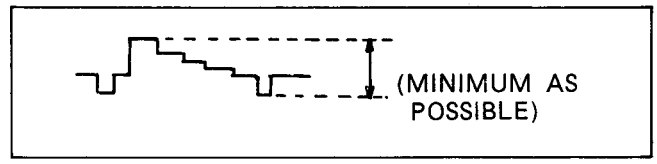

Fig.E12

2-3-13. SECAM KILLER ADJUSTMENT (NV-D48EG ONLY)

TP	ADJ.	MODE	INPUT
IC851-11	T851	RECORDING	SECAM VIDEO SIGNAL
TAPE	M.EQ.	SPEC.	
BLANK TAPE	OSCILLO-SCOPE	Portion A is peak to negative direction.	

1. Adjust T851 so that the portion "A" becomes maximum waveform.

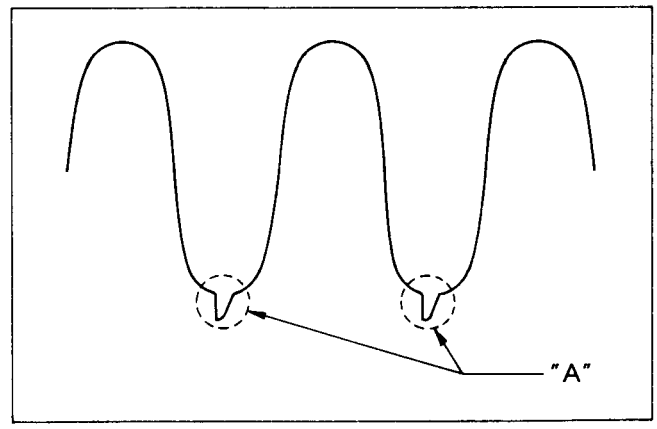

Fig.E13

AUDIO SECTION

2-3-14. AUDIO BIAS CURRENT ADJUSTMENT

TP	ADJ.	MODE	INPUT
TP4002 (+) TP4001 (-)	VR4002	RECORDING	
TAPE	M.EQ.	SPEC.	
BLANK TAPE	V.T.V.M.	2.2+-0.1mVrms	

2-3-15. AUDIO PLAYBACK LEVEL ADJUSTMENT

TP	ADJ.	MODE	INPUT
TP4001 (AUDIO OUT)	VR4001	SELF RECORDING	1KHz,0dB AUDIO SIGNAL
TAPE	M.EQ.	SPEC.	
BLANK TAPE	SIGNAL GENERAT-OR/ V.T.V.M.	E-E Level=-7+-2dB P.B. Level= E-E Level+-0.5dB	

NOTE:
Before this adjustment, "Tape Interchangeabiltity Adjustment" and "Audio Bias Current Adjustment" must be completed.

2-3-16. MUTING FREQUENCY ADJUSTMENT

TP	ADJ.	MODE	INPUT
IC3002-9	VR3020	STOP	
TAPE	M.EQ.	SPEC.	
	FREQUEN-CY COUNTER	15.625+-0.05KHz	

1. To make this adjustment, please prepare the following circuit as hown below.

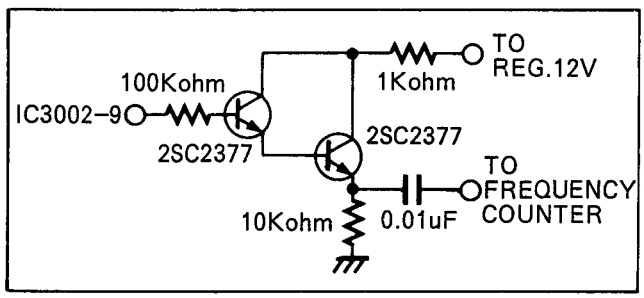

Fig.E14

2. Make a short circuit between VIDEO IN and GND.
3. Adjust VR3020 so that the frequency becomes 15.625+-0.05KHz.

DIGITAL SECTION

2-3-17. E-E LEVEL ADJUSTMENT

TP	ADJ.	MODE	INPUT
IC9504-1	VR9501	STOP	VIDEO SIGNAL (COLOUR BAR)
TAPE	M.EQ.	SPEC.	
	OSCILLO-SCOPE	1.8+-0.2Vp-p	

2-3-18. OUTPUT BIAS ADJUSTMENT

TP	ADJ.	MODE	INPUT
IC9506-19	VR9502	STOP	
TAPE	M.EQ.	SPEC.	
	D.V.M	1.6+-0.1V	

1. Connect the short jumper between video-in terminal and GND as shown in Fig.E15.
   (or Connect the BNC plug to video-in terminal on the unit in order to select the input signal to Line from Tuner.)
2. Connect the D.V.M to IC9506-19.
3. Adjust VR9502 so that the reading of D.V.M is 1.6+-0.1V.

2-3-19. SMALL PICTURE APC FREE RUN ADJUSTMENT

TP	ADJ.	MODE	INPUT
TP9001	VR9503	STOP	
TAPE	M.EQ.	SPEC.	
	FREQUEN-CY COUNTER	4,433,619+-190Hz	

1. Connect the short jumper between video-in and GND as shown in Fig.E15.
2. Connect the frequency counter to TP9001.
3. Adjust VR9503 so that the reading of frequency counter is 4,433,619+-190Hz.

2-3-20. SMALL PICTURE AFC FREE RUN ADJUSTMENT

TP	ADJ.	MODE	INPUT
IC9507-3	VR9506	STOP	
TAPE	M.EQ.	SPEC.	
	FREQUEN-CY COUNTER	15,625+-200Hz	

1. Connect the short jumper between video-in and GND as shown in Fig.E15.
2. Connect the frequency counter to IC9507-3.
3. Adjust VR9506 so that the reading of frequency counter is 15,625+-200Hz.

2-3-21. SMALL PICTURE V-SYNC FREE RUN ADJUSTMENT

TP	ADJ.	MODE	INPUT
IC9507-9	VR9505	STOP	
TAPE	M.EQ.	SPEC.	
	FREQUEN CY COUNTER	45+-2Hz	

1. Connect the short jumper between video-in and GND as shown in Fig.E15.
2. Connect the frequency counter to IC9507-9.
3. Adjust VR9505 so that the reading of frequency counter is 45+-2Hz.

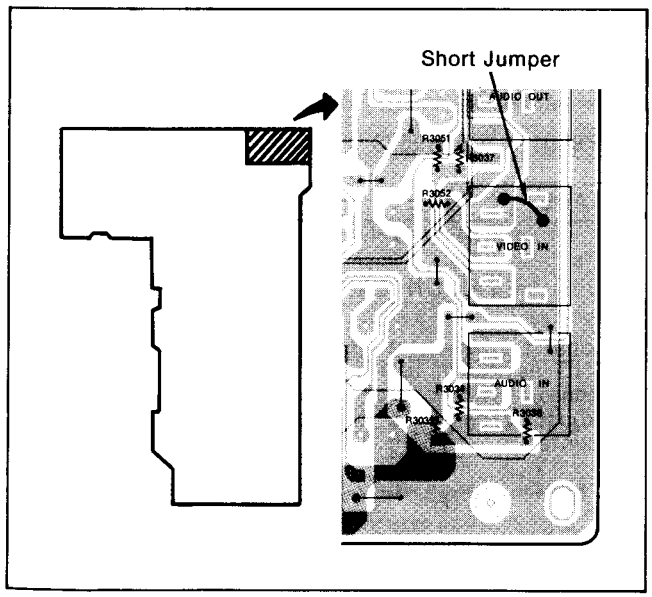

Fig.E15

2-3-22. LARGE PICTURE APC FREE RUN ADJUSTMENT

TP	ADJ.	MODE	INPUT
IC9509-23	VR9509	STOP	
TAPE	M.EQ.	SPEC.	
	FREQUEN-CY COUNTER	4,433,619+-190Hz	

1. Connect the short jumper between video-in and GND as shown in Fig.E15.
2. Connect the frequency counter to IC9509-23.
3. Adjust VR9509 so that the reading of frequency counter is 4,433,619+-190Hz.

2-3-23. LARGE PICTURE AFC FREE RUN ADJUSTMENT

TP	ADJ.	MODE	INPUT
IC9508-3	VR9508	STOP	
TAPE	M.EQ.	SPEC.	
	FREQUEN CY COUNTER	15,625+-200Hz	

1. Connect the short jumper between video-in and GND as shown in Fig.E15.
2. Connect the frequency counter to IC9508-3.
3. Adjust VR9508 so that the reading of frequency counter is 15,625+-200Hz.

2-3-24. LARGE PICTURE V-SYNC OSC FREE RUN ADJUSTMENT

TP	ADJ.	MODE	INPUT
IC9508-9	VR9507	STOP	
TAPE	M.EQ.	SPEC.	
	FREQUEN-CY COUNTER	45+-2Hz	

1. Connect the short jumper between video-in and GND as shown in Fig.E15.
2. Connect the frequency counter to IC9508-9.
3. Adjust VR9507 so that the reading of frequency counter is 45+-2Hz.

2-3-25. SMALL PICTURE COLOUR FLICKER ADJUSTMENT

TP	ADJ.	MODE	INPUT
C9545(−)	VR9504 L9506	STOP	VIDEO SIGNAL (COLOUR BAR)
TAPE	M.EQ.	SPEC.	
	OSCILLO-SCOPE	A LEVEL...MAXIMUM B LEVEL...MINIMUM	

1. Place the unit in "Digital 1/4-Screen Frame Store mode" by using remote controller.
2. Connect the oscilloscope to (−) terminal of C9545.
3. Adjust VR9504 so that the "A" level is maximized and then adjust L9506 and L9507 alternately so that the "B" level is minimized.

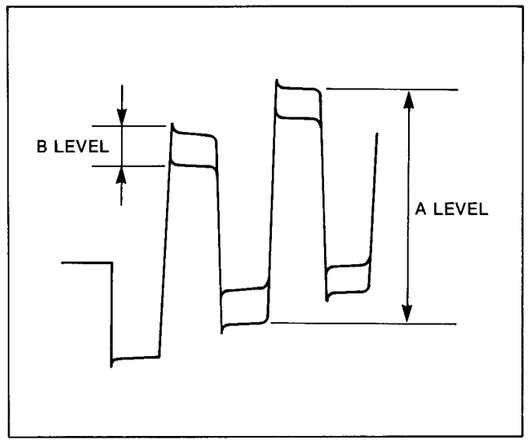

Fig.E16

2-3-26. SMALL PICTURE LEVEL ADJUSTMENT

TP	ADJ.	MODE	INPUT
P9501-3	VR9510	STOP	VIDEO SIGNAL (COLOUR BAR)
TAPE	M.EQ.	SPEC.	
	OSCILLO-SCOPE	Refer to Fig.E17	

1. Place the unit in "Digital 1/4-Screen Frame Store mode" by using remote controller.
2. Connect the oscilloscope to pin 3 of P9501.
3. Adjust VR9510 so that the white level of small picture is the same level as large picture's white level.

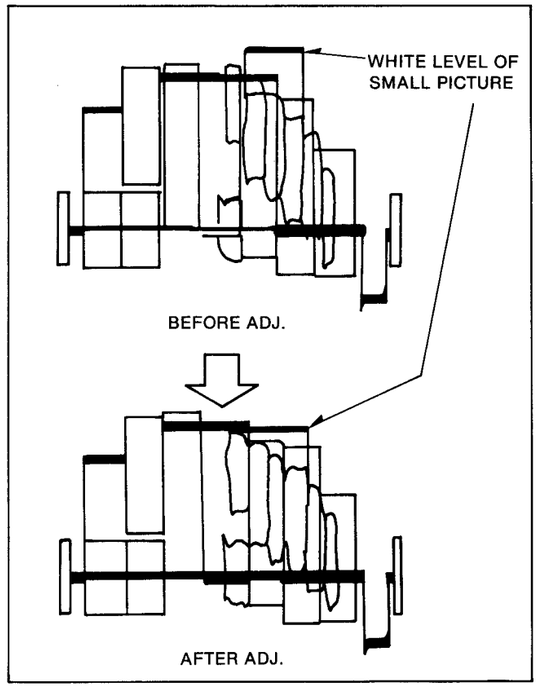

Fig.E17

LOCATION OF TEST POINTS & CONTROLS — 1 —

MAIN C.B.A.

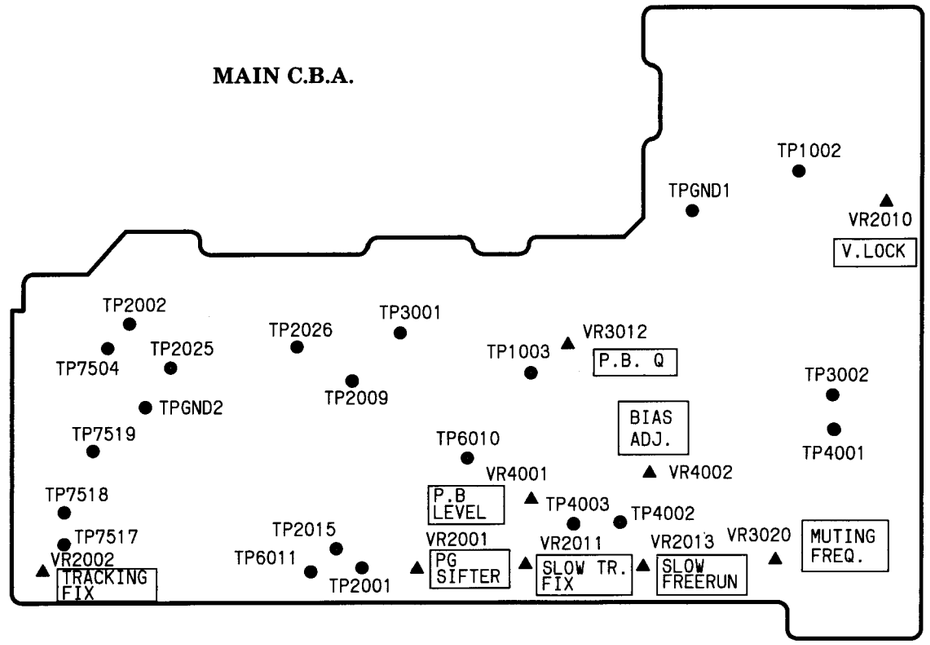

SUB DIGITAL C.B.A.

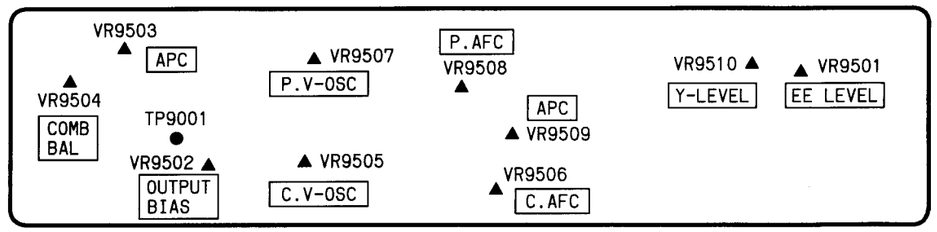

HEAD AMP C.B.A.

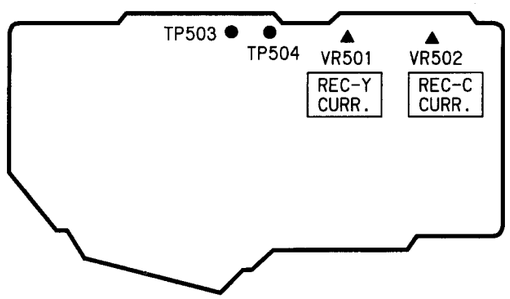

SECAM PACK C.B.A. (NV-D48EG)

LUMINANCE & CHROMINANCE PACK C.B.A.

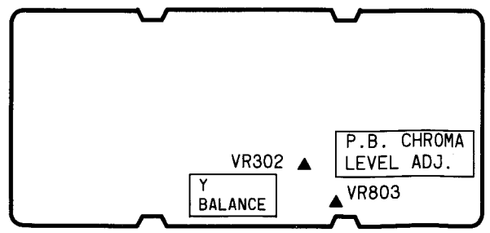

LOCATION OF TEST POINTS & CONTROLS — 2 —

TIMER C.B.A.

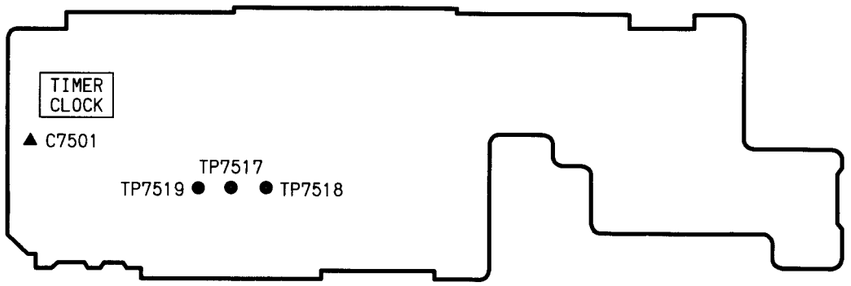

OPERATION C.B.A.

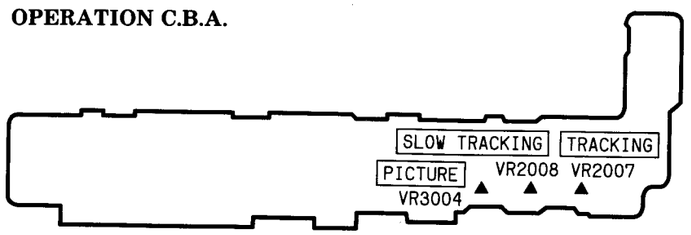

IR RECEIVER C.B.A.

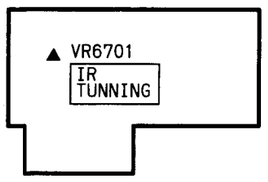

TUNER & TV DEMODULATOR PACK C.B.A.

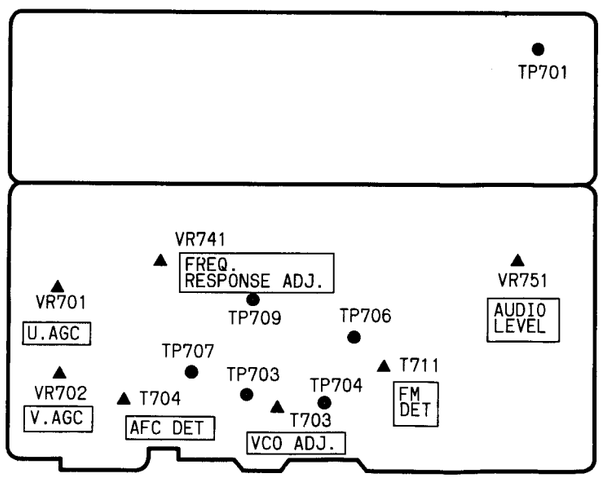

TIMER SECTION

Note:
1. Do not connect the AC power plug.
2. Make a short circuit at C7571 to discharge. (Refer to the Technical Information)

2-3-27. TIMER REFERENCE CLOCK ADJUSTMENT

TP	ADJ.	MODE	INPUT
IC7501-32	C7501		
TAPE	M.EQ.	SPEC.	
	FREQUEN-CY COUNTER	3906.25+-0.008us	

1. Set the voltage of the DC, power supply for 5.8V+-0.1V and supply it to P7502-8 (+) and GND (-).
2. Connect a jumper wire between P7502-7 and GND.
3. Connect a jumper wire between Anode and Cathode of D7537.

TV DEMODULATOR SECTION

2-3-28. TEST EQUIPMENTS

To make adjustment completely, following equipments are required.

1. VIF SWEEP GENERATOR with the Trap Adjustor
   .....38.9MHz(NV-D48EG)
   .....39.5MHz(NV-D48B)
2. SIF SWEEP GENERATOR
   .....5.5MHz+-150KHz(NV-D48EG)
   .....6.0MHz+-150KHz(NV-D48B)
3. CW OSCILLATOR
   .....38.9MHz+-100KHZ(NV-D48EG)
   .....39.5MHz+-100KHz(NV-D48B)
4. MONITOR SCOPE
5. OSCILLOSCOPE
6. DIGITAL VOLT METER

Note1:
1. First, remove the screw and remove the TV Demodulator Pack C.B.A. from the Main C.B.A.
2. Unsolder the 2 soldering portions (B) and open the tuner section in TV Demodulator Pack C.B.A.

CIRCUIT BOARD LAYOUT

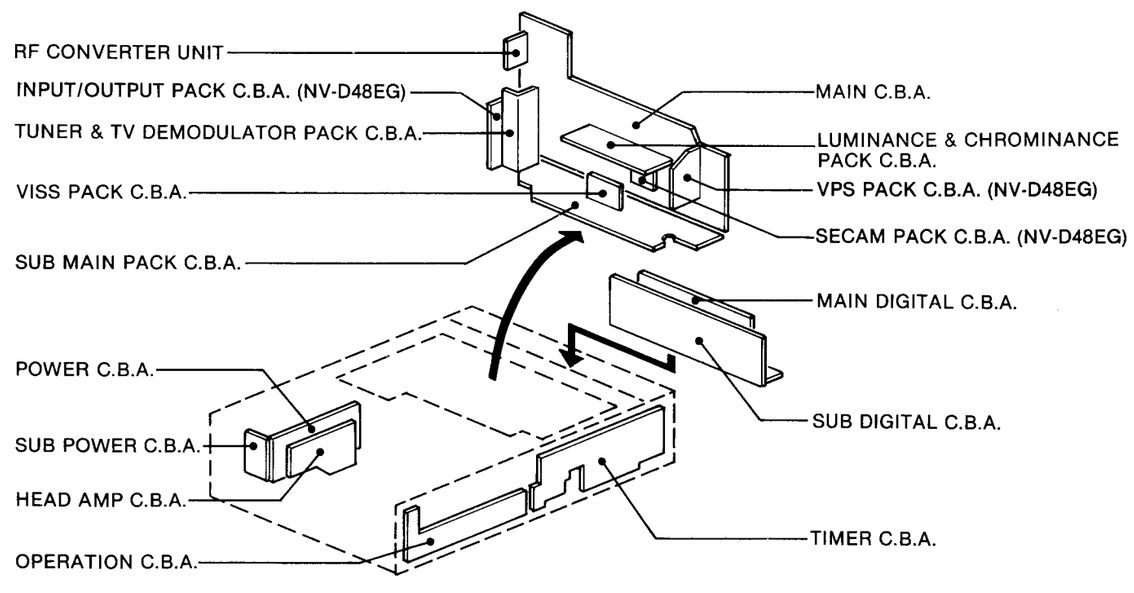

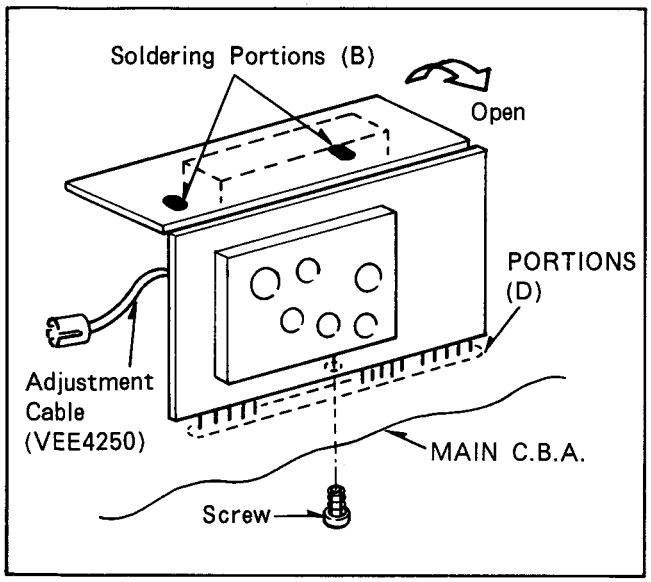

Fig.E18

3. Exchange the original cable to newly develope adjustment cable (VEE4250) as shown in Fig. E15.
4. Reinstall the TV Demodulator Pack C.B.A. to the Main C.B.A. on foil side and finaly solder the soldering portions of the TV Demodulator Pack C.B.A.

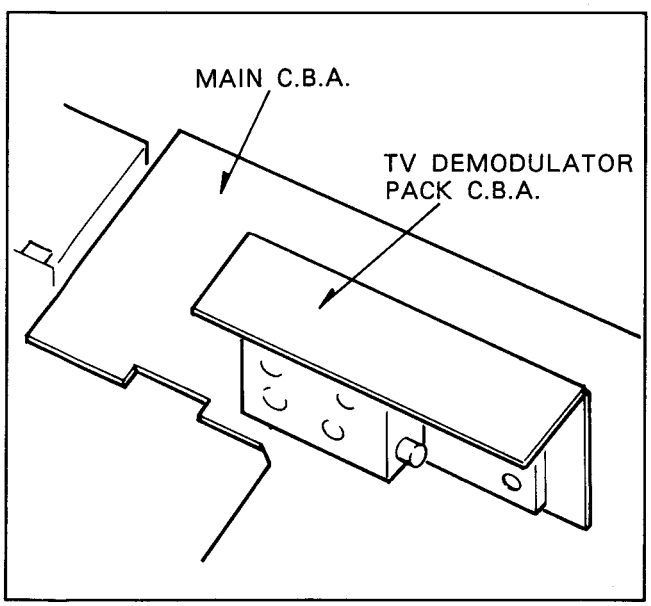

Fig.E19

NOTE2:
Tomake adjustments, please prepare the following equipments and install them according to each adjustment items.

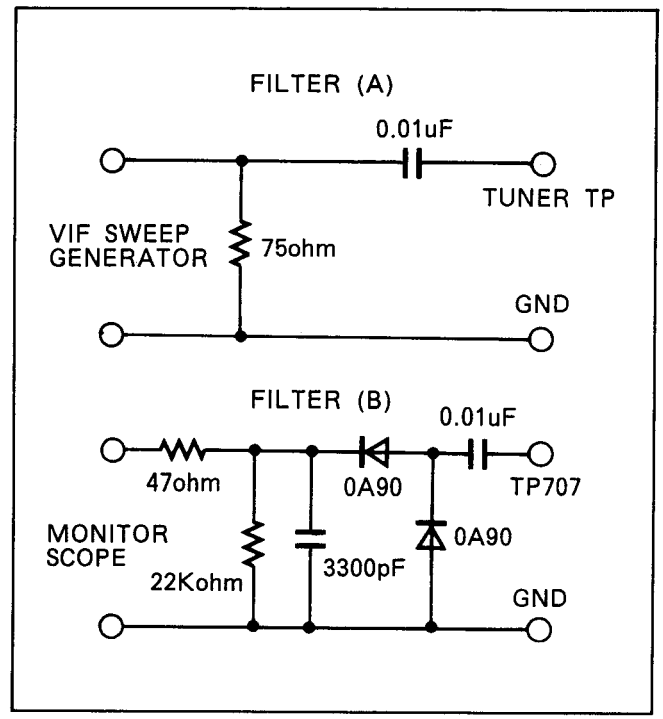

Fig.E20

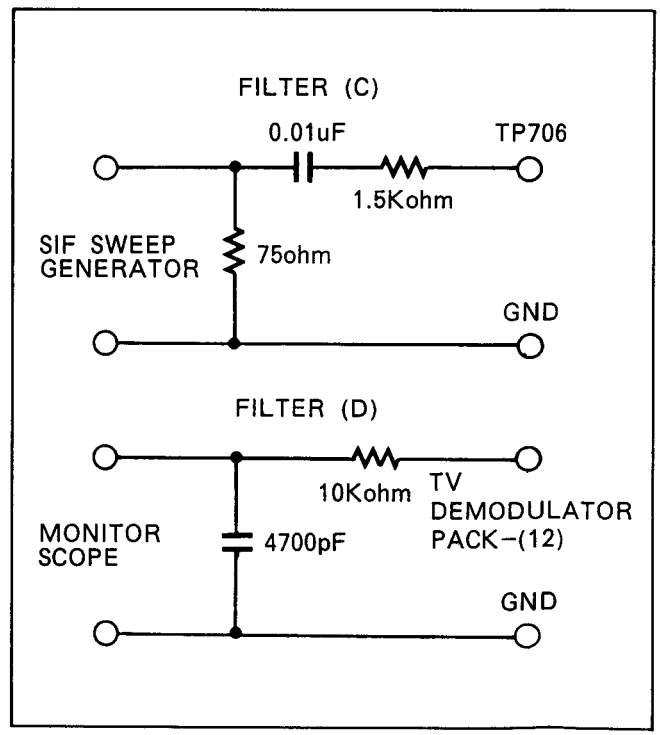

Fig.E21

2-3-29. VIF SWEEP ADJUSTMENT

TP	ADJ.	MODE	INPUT
TP707	T703 (X717:EG) TUNER CONVERTER COIL		VIF SWEEP
TAPE	M.EQ.	SPEC.	
	VIF SWEEP/ MONITOR SCOPE	Refer to VIF Specification Chart (Fig. E25)	

1. Set the BAND SW of the deck for as shown in Fig. 22. And adjust the SEARCH Button (+,−) so that the voltage at BT terminal of the tuner becomes 15V+−1V.
2. Set the AFC SW of the deck for OFF mode.
3. Connect a jumper wire between TUNER AGC terminal and GND. And connect a capacitor (50V,1uF) between TP703 and GND.
4. Connect the VIF sweep generator to TUNER TEST POINT through the FILTER JIG (A) as shown in Fig. E20. And connect the MONITOR SCOPE to TP707 through the FILTER JIG (B) as shown in Fig. E20.
5. Adjust the T703 so that the marker position (A) becomes centre position of f1 and f2 as shown in Fig. E25.
6. Preadjust the X717 and Tuner Converter Coil so that the sweep output waveform becomes maximum and then adjust the X717 and tuner Converter Coil so that the waveform becomes as shown in Fig. E25.(NV−D48EG ONLY)
7. Adjust the output of the VIF sweep generator so that the sweep wave becomes 0.3Vp−p. Then release 20dB attenuation from the attenuator of the VIF sweep generator.
8. Connect the variable resistor JIG (E) to both points TP709 and TV Demodulator Pack −(2) as shown below.

Model No.	BAND	BAND SW
NV−D48EG	VHF Low	I
NV−D48B	UHF	U

Fig.E22

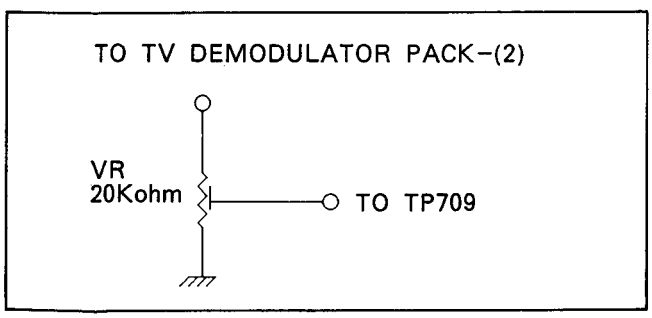

Fig.E23 ADJUSTMENT JIG (E)

9. Adjust the VR of the JIG (E) so that the output of the sweep wave becomes 0.3Vp−p.

10. Adjust the TUNER CONVERTER COIL so that the fp trap and fc trap as shown below.

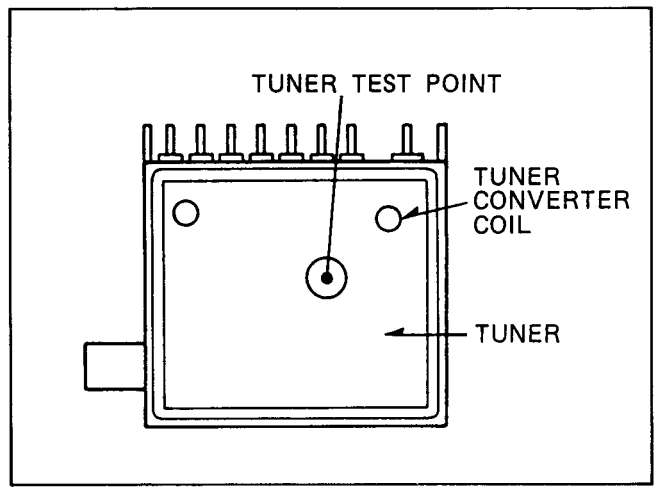

Fig.E24

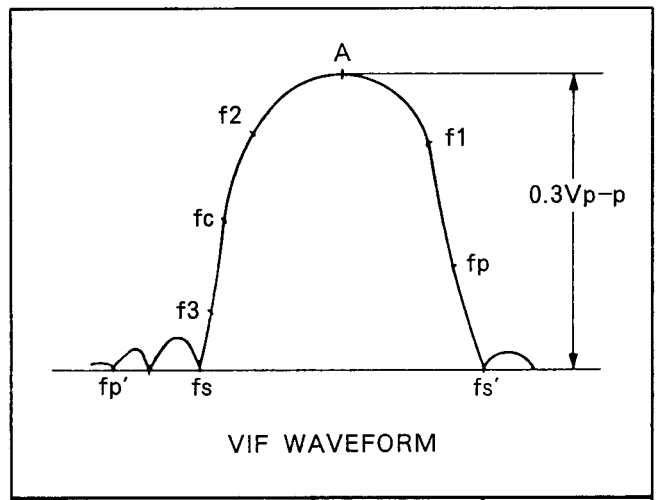

VIF WAVEFORM

FREQ. \ MODEL		NV−D48EG	NV−D48B
MARKER FREQUENCY	fs'	40.4MHz	41.5MHz
	fp	38.9MHz	39.5MHz
	f1	38.15MHz	38.6MHz
	f2	35.22MHz	35.5MHz
	fc	34.47MHz	35.07MHz
	f3	33.97MHz	34.57MHz
	fs	33.4MHz	33.5MHz
	fp'	31.9MHz	31.5MHz
SPECIFICATIONS	fp	30+−5%	25+−5%
	fc	33~55%	30~50%

Fig.E25

2-3-30. SIF SWEEP ADJUSTMENT

TP	ADJ.	MODE	INPUT
AUDIO OUT (TV DEMO-DULATOR PACK-12)	T711		SIF SWEEP
TAPE	M.EQ.	SPEC.	
	VIF SWEEP/ MONITOR SCOPE	A=5.5MHz (EG) A=6.0MHz (B)	

1. Set the BAND SW of the deck for as shown in Fig. E22. And adjust the SEARCH Button (+,-) so that the voltage at BT terminal of the tuner becomes 15V+-1V.
2. Set the AFC SW of the deck for OFF mode.
3. Connect the SIF sweep generator to TP706 through the FILTER JIG (C) as shown in Fig. E21. And connect the MONITOR SCOPE to AUDIO OUT through the FILTER JIG (D) as shown in Fig. E21.
4. Set the output of the SIF sweep generator for 250mVp-p at no load.
5. Connect the JIG (E) to both points TP709 and TV Demodulator Pack-(2) as shown in Fig. E23. Adjust the VR of the JIG (E) so that the D.C. level becomes less than 3V.
6. Adjust the T711 so that the SIF waveform becomes MAXIMUM and attenuation of (A) trap becomes MINIMUM.

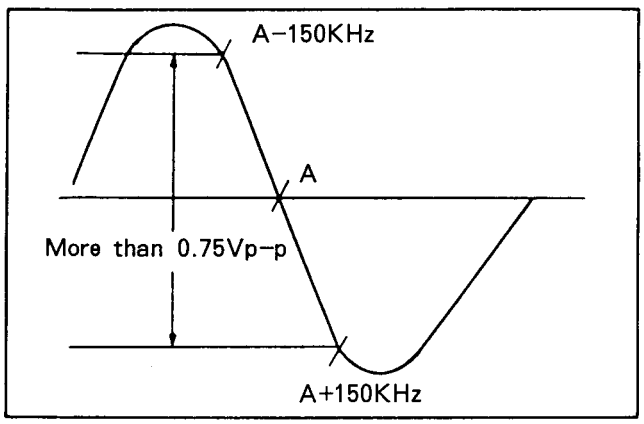

Fig.E26 SIF WAVEFORM

7. Comform that the level between (A)+-150KHz marker position is more than 0.75Vp-p.

2-3-31. AFC ADJUSTMENT

TP	ADJ.	MODE	INPUT
AFC TERMINAL OF THE TUNER	T704		CW SIGNAL
TAPE	M.EQ.	SPEC.	
	CW OSCILLA-TOR/D.V.M.	A=38.9MHz	

1. Set the BAND SW of the deck for as shown in Fig. E22. And adjust the SEARCH Button (+,-) so that the voltage at BT terminal of the tuner becomes 15V+-1V.
2. Set the AFC SW of the deck for OFF mode.
3. Set the CW oscillator output to "A" MHz and 1Vp-p. And connect the CW oscillator output to the TUNER TEST POINT.
4. Connect the D.V.M. to the AFC terminal of the tuner.
5. Read the value "B" of the D.V.M., when the AFC SW is OFF mode.
6. Set the AFC SW for ON mode and adjust T704 for "B"+-0.3V.
7. Change the frequency of the CW oscillator to "A"(MHz)+-100KHz, and confirm the difference of the AFC voltage is more than +-2V respective.

2-3-32. VIDEO FREQUENCY RESPONSE

TP	ADJ.	MODE	INPUT
VIDEO OUT (TV DEMO-DULATOR PACK-5)	VR741		VIF SWEEP
TAPE	M.EQ.	SPEC.	
	OSCILLO-SCOPE/ VIF SWEEP	A=80% (B) A=70% (EG)	

1. Connect the VIF sweep generator to the tuner unit directly after removing the connector from RF converter.
2. Set the BAND SW for as shown in Fig. E22. And tune the VIF sweep signal.
3. Set the AFC SW for ON mode.
4. Set the output of the VIF sweep generator to 800mVp-p.
5. Adjust VR741 so that the waveform at the VIDEO out (TV DEMODULATOR PACK-5) becomes as shown below.

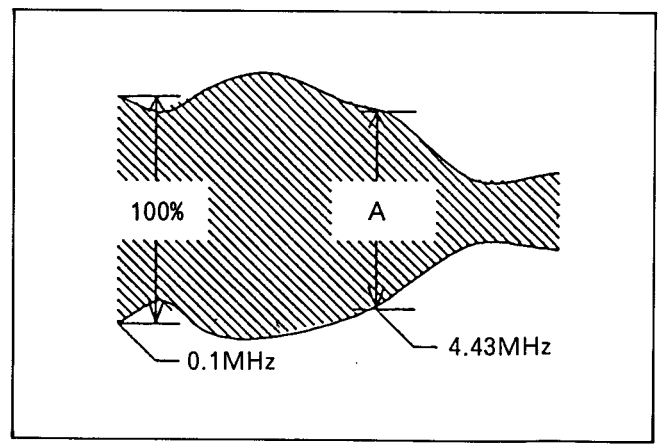

Fig.E27

2-3-33. AUDIO LEVEL ADJUSTMENT

TP	ADJ.	MODE	INPUT
AUDIO OUT (TV DEMODU-LATOR PACK-12)	VR751		RF SIGNAL
TAPE	**M.EQ.**	**SPEC.**	
	OSCILLO-SCOPE	120+-10mVp-p	

1. Set the AFC SW for ON position.
2. Supply RF signal to the RF IN terminal and tune this signal.
3. Adjust the VR751 so that the audio level becomes 120+-10mVp-p.

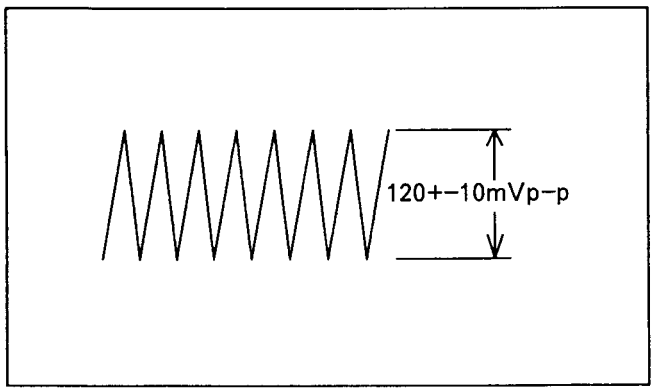

Fig.E28

SYMBOL	TRUTH VALUE TABLE
INVERTER 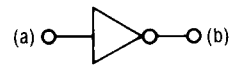	IN (a) H L OUT (b) L H
COMPARTOR 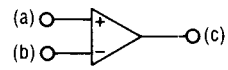	IN (a) (b) (a)>(b) (a)<(b) OUT (c) H L
AND CIRCUIT 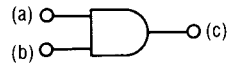	IN (a) L L H H (b) L H L H OUT (c) L L L H
OR CIRCUIT 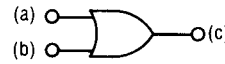	IN (a) L L H H (b) L H L H OUT (c) L H H H
THREE STATES BUFFER 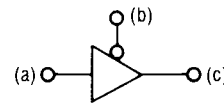	IN (a) H L H or L (b) L L H OUT (c) H L ※ ※ High Impedance
TR. SW (NPN TYPE) 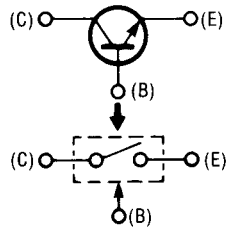	BASE H L TR. SW ON OFF
TR. SW (PNP TYPE) 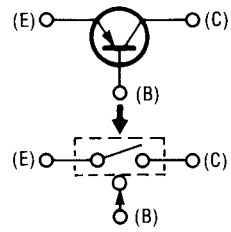	BASE H L TR. SW OFF ON
R-S TYPE FLIP-FLOP 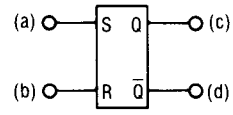	IN (a) L L ⎍ (b) L ⎍ L OUT (c) ※ L H (d) ◆ H L ※ Initial condition is maintained. ◆ Initial condition is reverced.

SECTION 3
BLOCK DIAGRAMS & SCHEMATIC DIAGRAMS
3-1. SYSTEM CONTROL & TIMER BLOCK DIAGRAM

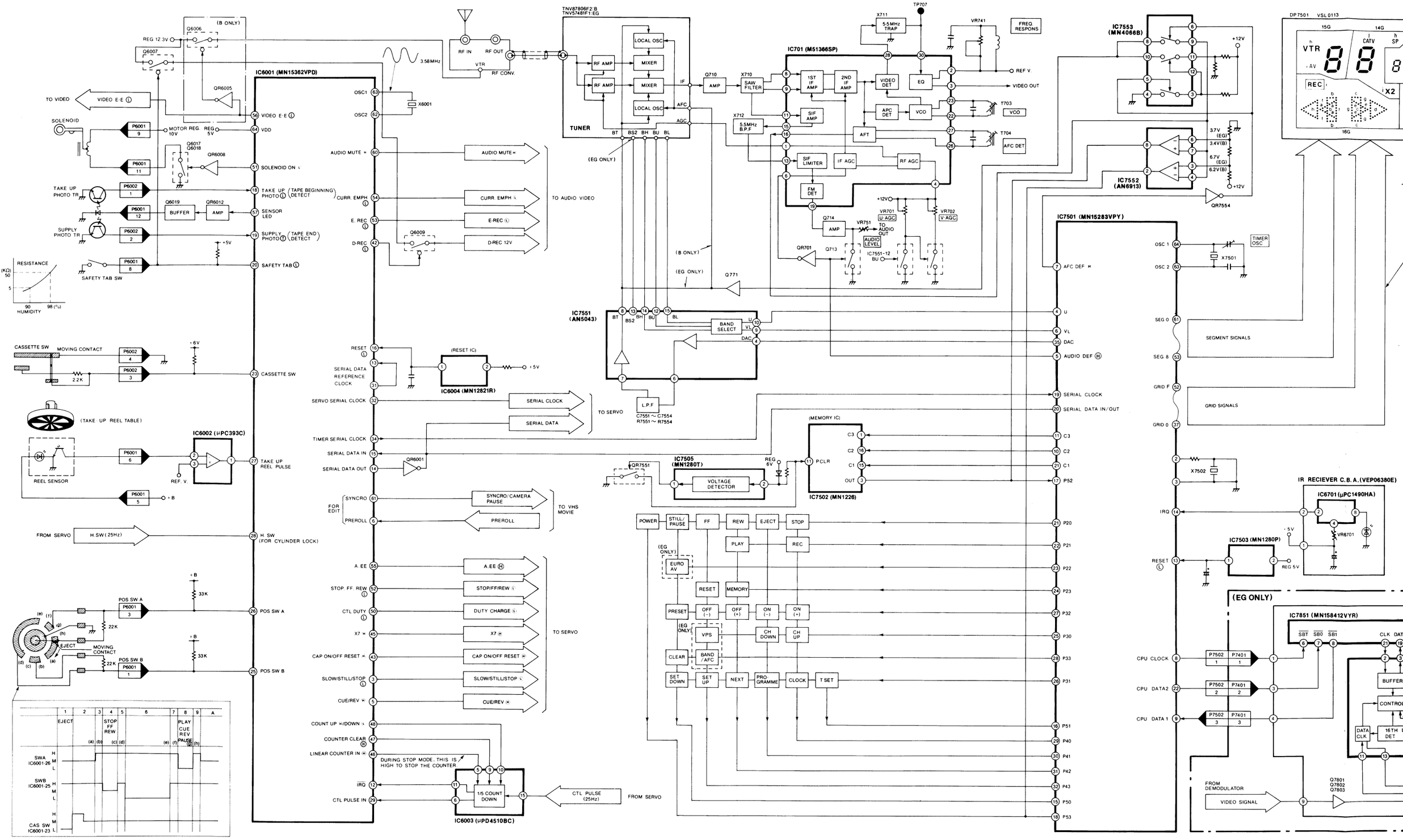

3—1

3—2

RAMS

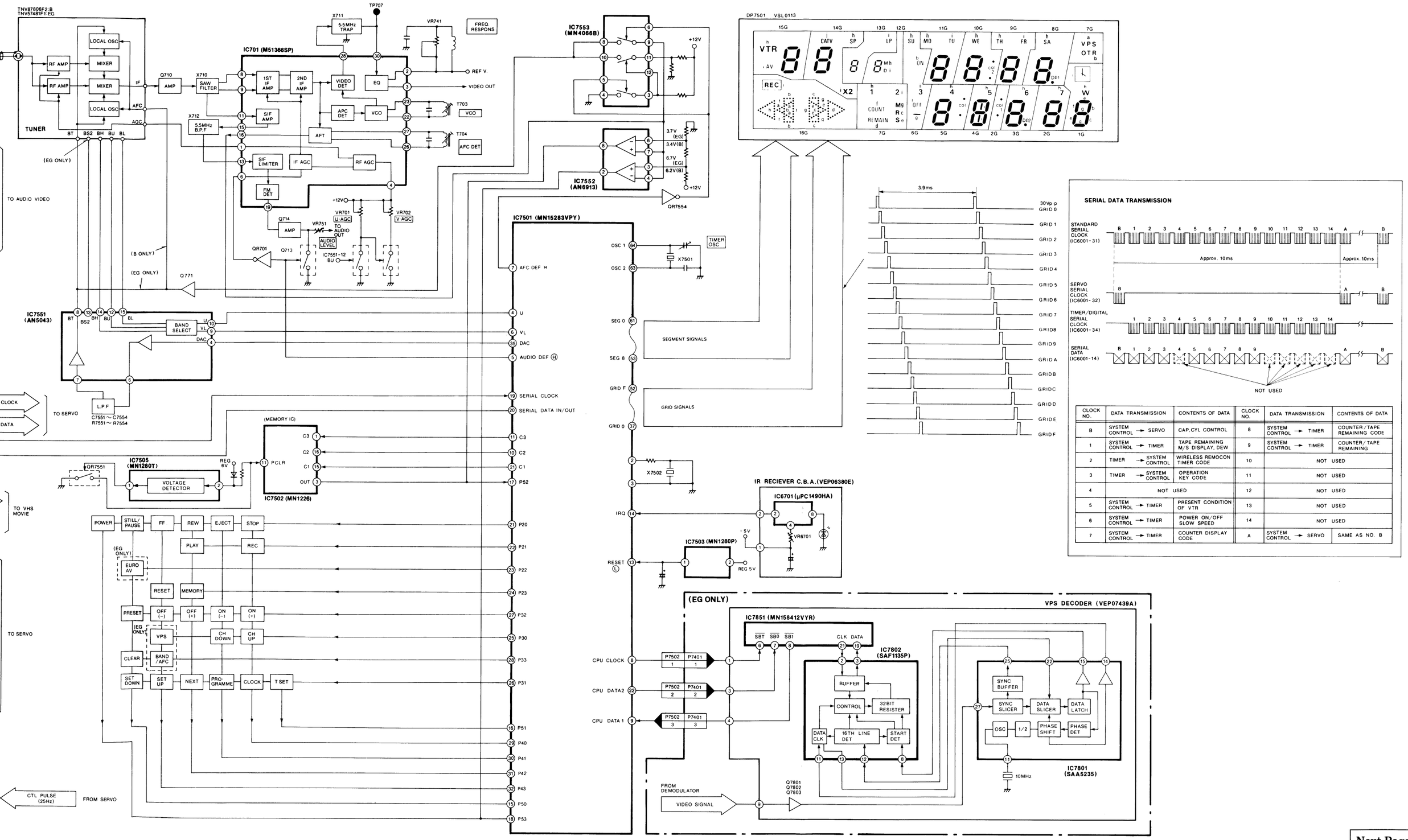

CLOCK NO.	DATA TRANSMISSION	CONTENTS OF DATA	CLOCK NO.	DATA TRANSMISSION	CONTENTS OF DATA
B	SYSTEM CONTROL → SERVO	CAP.CYL CONTROL	8	SYSTEM CONTROL → TIMER	COUNTER/TAPE REMAINING CODE
1	SYSTEM CONTROL → TIMER	TAPE REMAINING M/S DISPLAY, DEW	9	SYSTEM CONTROL → TIMER	COUNTER/TAPE REMAINING
2	TIMER → SYSTEM CONTROL	WIRELESS REMOCON TIMER CODE	10	NOT USED	
3	TIMER → SYSTEM CONTROL	OPERATION KEY CODE	11	NOT USED	
4	NOT USED		12	NOT USED	
5	SYSTEM CONTROL → TIMER	PRESENT CONDITION OF VTR	13	NOT USED	
6	SYSTEM CONTROL → TIMER	POWER ON/OFF SLOW SPEED	14	NOT USED	
7	SYSTEM CONTROL → TIMER	COUNTER DISPLAY CODE	A	SYSTEM CONTROL → SERVO	SAME AS NO. B

Next Page: SERVO Section

3-2. SERVO BLOCK DIAGRAM

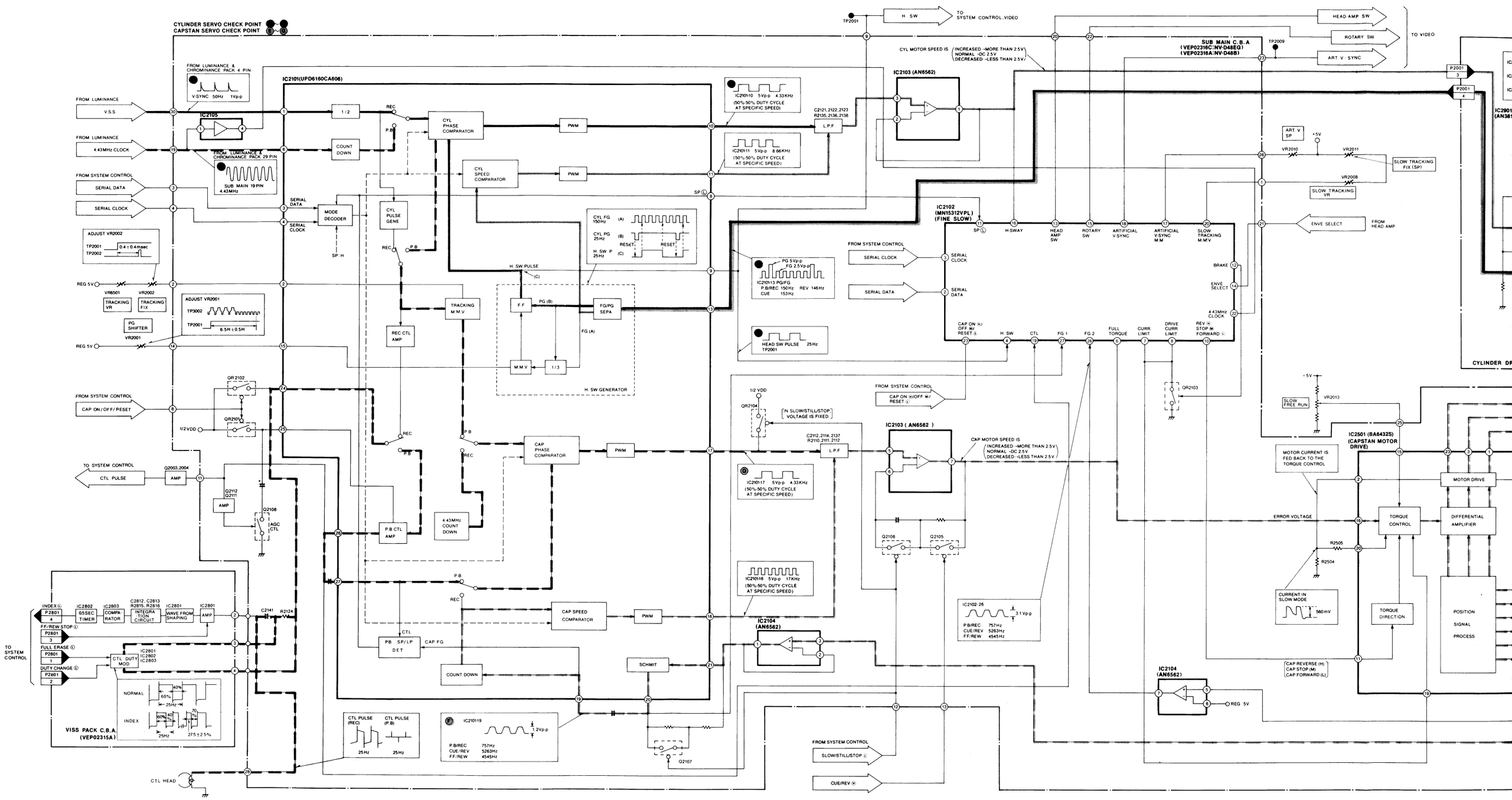

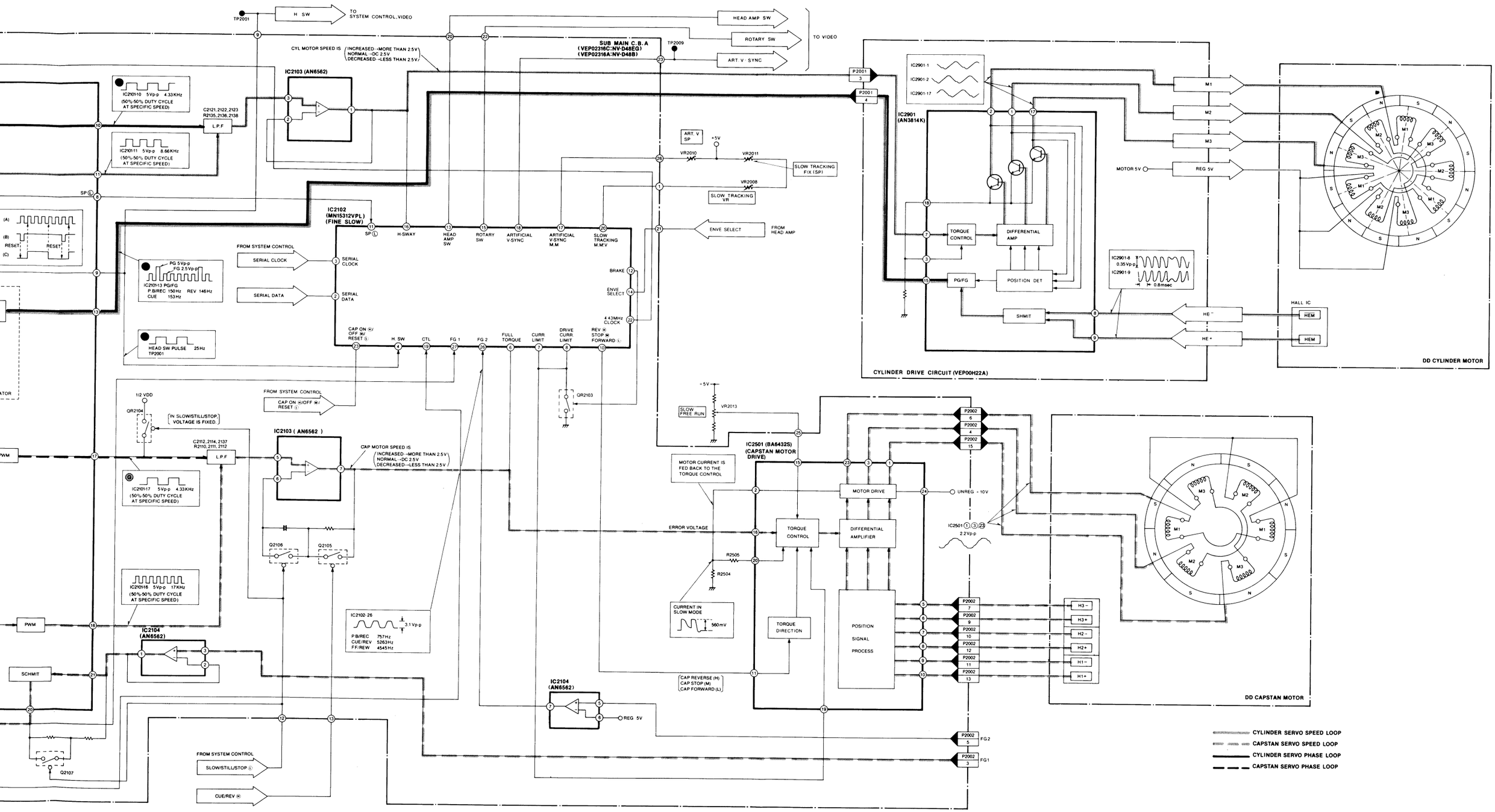

TP2001
H SW
TO SYSTEM CONTROL, VIDEO
HEAD AMP SW
ROTARY SW
ART. V SYNC
TO VIDEO
SUB MAIN C.B.A
(VEP02316C:NV-D48EG)
(VEP02316A:NV-D48B)
TP2009
CYL MOTOR SPEED IS
INCREASED→MORE THAN 2.5V
NORMAL→DC 2.5V
DECREASED→LESS THAN 2.5V
IC2103 (AN6562)
IC2101-10 5Vp-p 4.33KHz
(50%-50% DUTY CYCLE AT SPECIFIC SPEED)
C2121, 2122, 2123
R2135, 2136, 2138
L.P.F
IC2101-11 5Vp-p 8.66KHz
(50%-50% DUTY CYCLE AT SPECIFIC SPEED)
IC2102
(MN15312VPL)
(FINE SLOW)
H-SWAY
HEAD AMP SW
ROTARY SW
ARTIFICIAL V-SYNC
ARTIFICIAL V-SYNC M.M
SLOW TRACKING M.M'V
FROM SYSTEM CONTROL
SERIAL CLOCK
SERIAL DATA
PG 5Vp-p
FG 2.5Vp-p
IC2101-13 PG/FG
P.B/REC 150Hz REV 146Hz
CUE 153Hz
HEAD SW PULSE 25Hz
TP2001
BRAKE
ENVE SELECT
4.43MHz CLOCK
CAP ON/OFF/RESET
H. SW
CTL
FG 1
FG 2
FULL TORQUE
CURR LIMIT
DRIVE CURR LIMIT
REV STOP FORWARD
ART. V SP
+5V
VR2010
VR2011
VR2008
SLOW TRACKING FIX (SP)
SLOW TRACKING VR
ENVE SELECT
FROM HEAD AMP
IC2901
(AN3814K)
IC2901-1
IC2901-2
IC2901-17
TORQUE CONTROL
DIFFERENTIAL AMP
PG/FG
POSITION DET
SHMIT
IC2901-8 0.35Vp-p
IC2901-9 0.8msec
M1
M2
M3
MOTOR 5V
REG 5V
HE−
HE+
HALL IC
HEM
DD CYLINDER MOTOR
CYLINDER DRIVE CIRCUIT (VEP00H22A)
1/2 VDD
QR2104
IN SLOW/STILL/STOP, VOLTAGE IS FIXED.
C2112, 2114, 2137
R2110, 2111, 2112
IC2101-17 5Vp-p 4.33KHz
(50%-50% DUTY CYCLE AT SPECIFIC SPEED)
IC2103 (AN6562)
CAP MOTOR SPEED IS
INCREASED→MORE THAN 2.5V
NORMAL→DC 2.5V
DECREASED→LESS THAN 2.5V
Q2106
Q2105
IC2101-16 5Vp-p 17KHz
(50%-50% DUTY CYCLE AT SPECIFIC SPEED)
PWM
IC2104
(AN6562)
SCHMIT
Q2107
IC2102-26
3.1Vp-p
PB/REC 757Hz
CUE/REV 5263Hz
FF/REW 4545Hz
FROM SYSTEM CONTROL
SLOW/STILL/STOP
CUE/REV
QR2103
SLOW FREE RUN
VR2013
IC2501 (BA6432S)
(CAPSTAN MOTOR DRIVE)
MOTOR CURRENT IS FED BACK TO THE TORQUE CONTROL
ERROR VOLTAGE
R2505
R2504
CURRENT IN SLOW MODE
560mV
TORQUE CONTROL
TORQUE DIRECTION
MOTOR DRIVE
DIFFERENTIAL AMPLIFIER
POSITION SIGNAL PROCESS
UNREG +10V
IC2501 2.2Vp-p
CAP REVERSE (H)
CAP STOP (M)
CAP FORWARD (L)
IC2104
(AN6562)
REG 5V
H3−
H3+
H2−
H2+
H1−
H1+
FG2
FG1
DD CAPSTAN MOTOR
CYLINDER SERVO SPEED LOOP
CAPSTAN SERVO SPEED LOOP
CYLINDER SERVO PHASE LOOP
CAPSTAN SERVO PHASE LOOP

3-3. LUMINANCE & CHROMINANCE BLOCK DIAGRAM

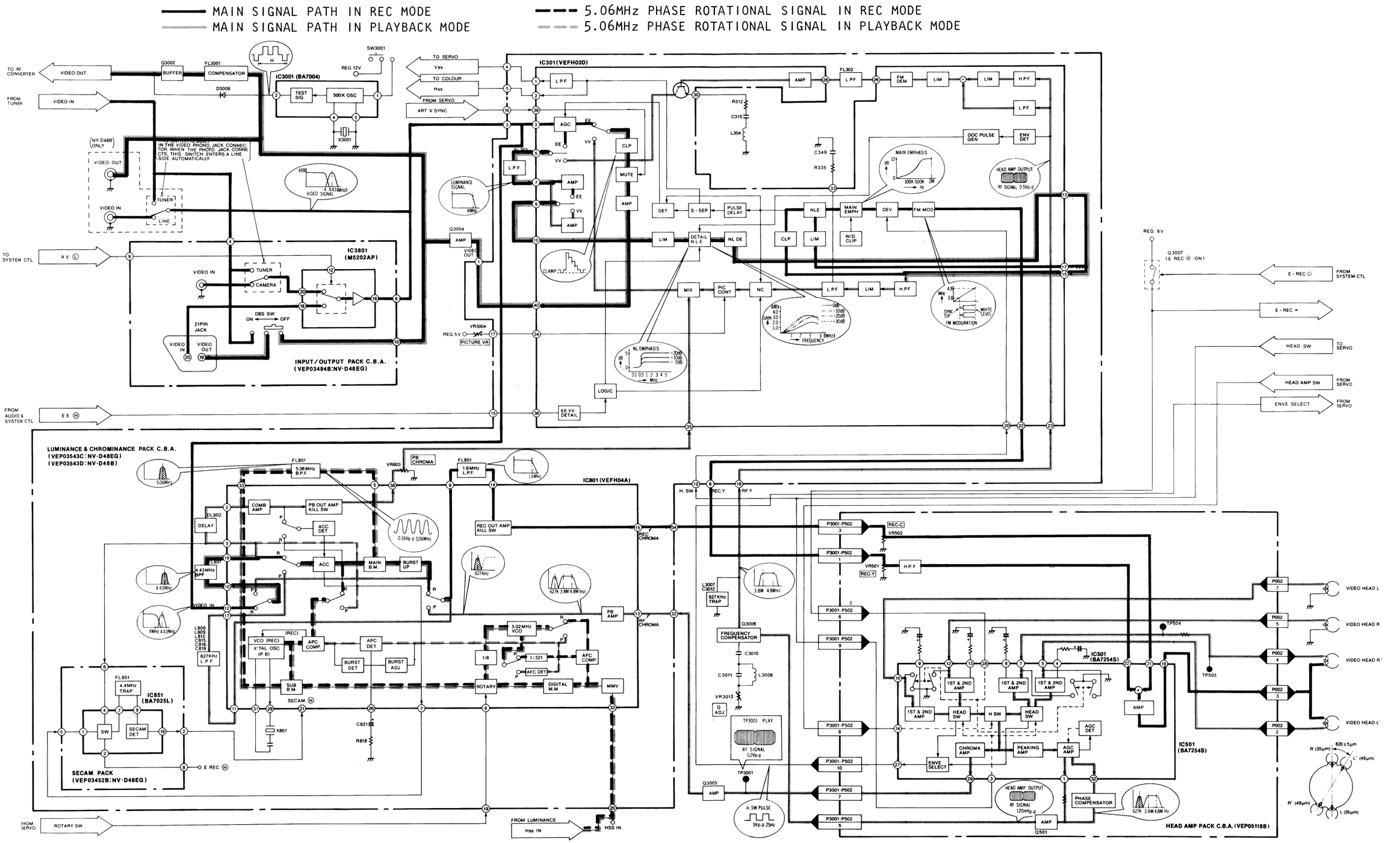

3-4. DIGITAL BLOCK DIAGRAM

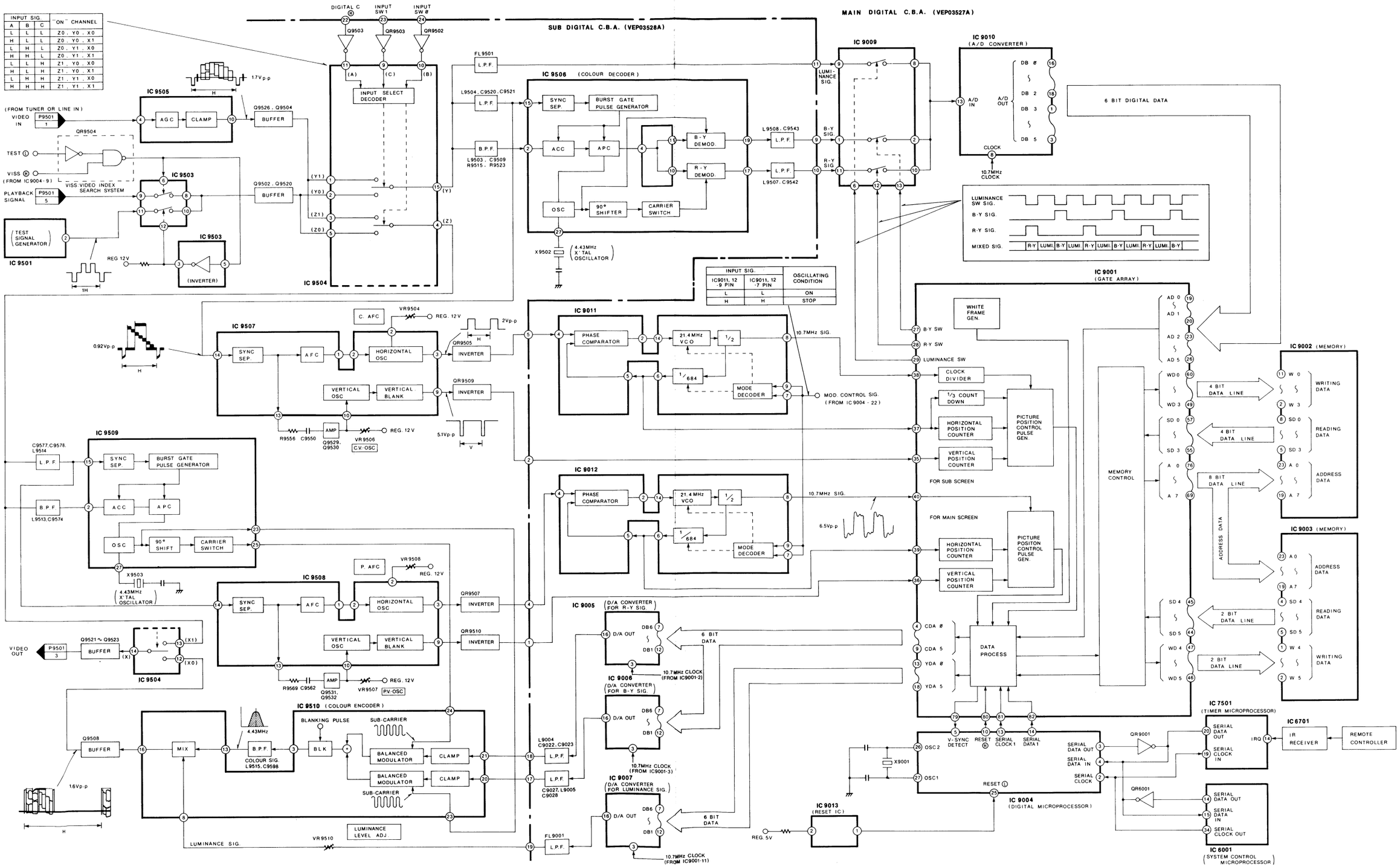

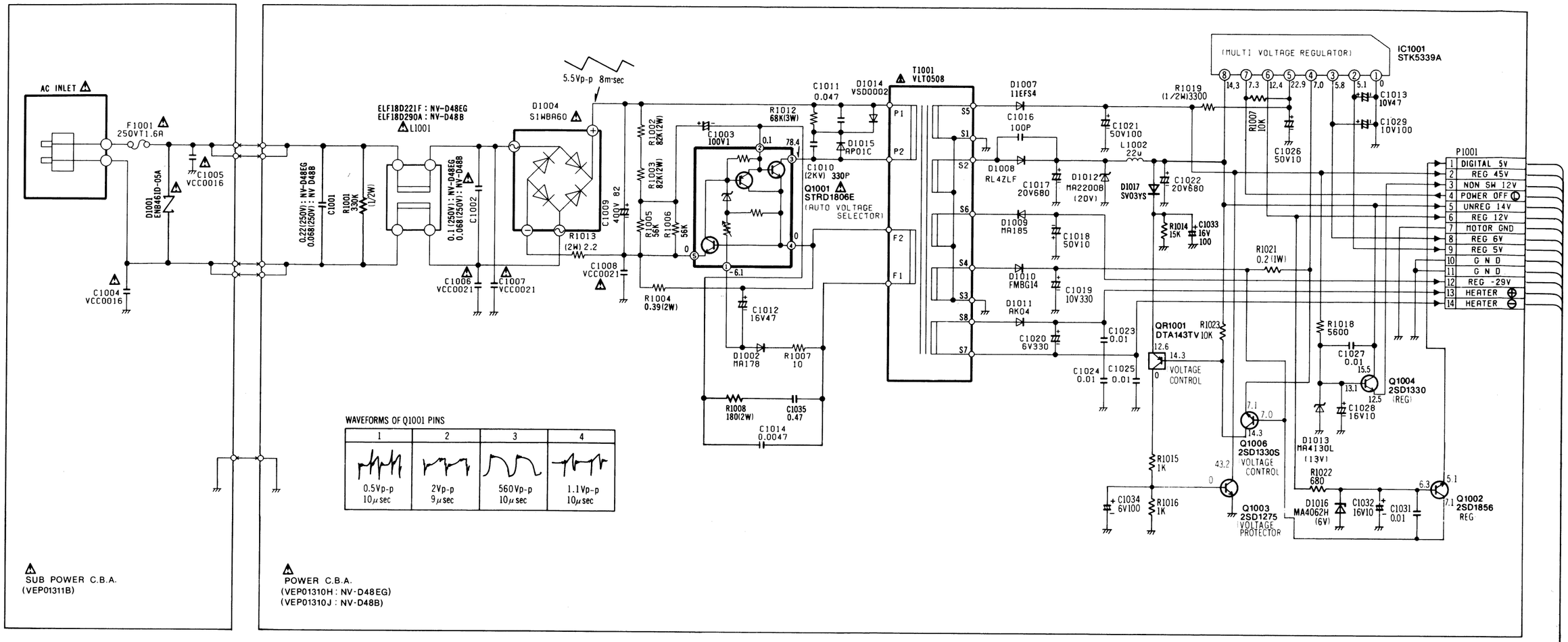

NOTE 1. WHEN MEASURE THE VOLTAGE OR WAVEFORM ON THE POWER TRANSFORMER CIRCUIT, SET THE GND TERMINAL OF MEASURING POINT AS FOLLOWS.
PRIMARY SIDE ..... Q1001-(5)
SECONDARY SIDE ... TP GND OF MAIN C.B.A.

NOTE 2. THE DC VOLTAGE INDICATED IN PRIMARY SIDE IS SHOWN THE VOLTAGE WHEN INPUT AC IS 240V.

NOTE: THE MEASUREMENT MODE OF THE DC VOLTAGE ON THIS DIAGRAM IS STOP MODE.

NOTE: DO NOT USE THE PART NUMBER SHOWN ON THIS DRAWING FOR ORDERING. THE CORRECT PART NUMBER IS SHOWN IN THE PARTS LIST, AND MAY BE SLIGHTLY DIFFERENT OR AMENDED SINCE THIS DRAWING WAS PREPARED.

IMPORTANT SAFETY NOTICE:
COMPONENTS IDENTIFIED BY THE SIGN ⚠ HAVE SPECIAL CHARACTERISTICS IMPORTANT FOR SAFETY WHEN REPLACING ANY OF THESE COMPONENTS, USE ONLY THE SPECIFIED PARTS.

IC BLOCK
IC1001 (STK5339A)

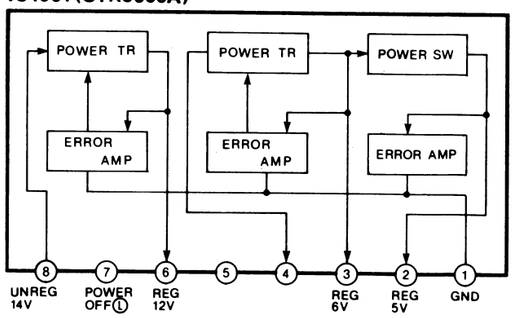

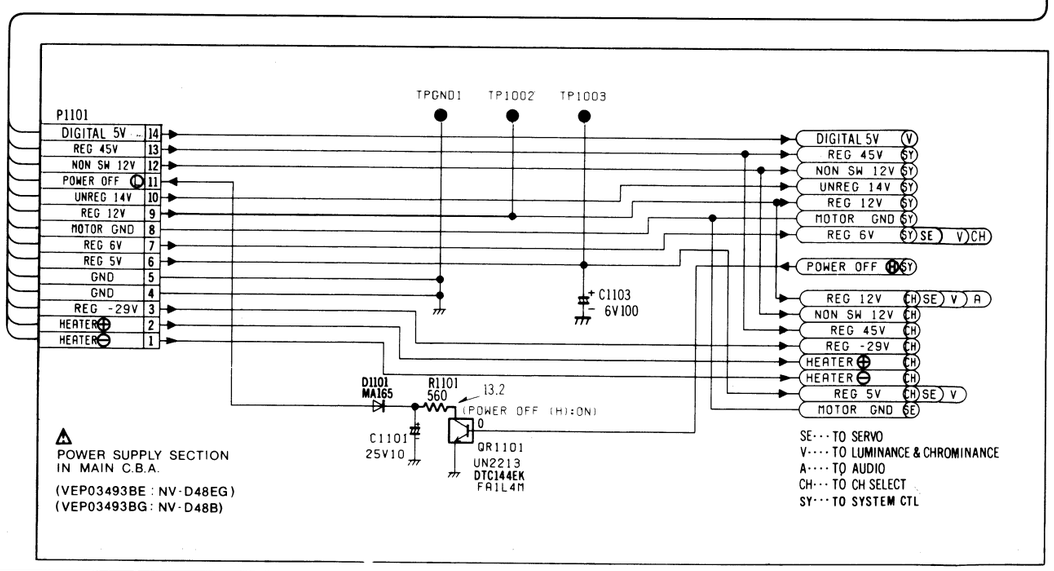

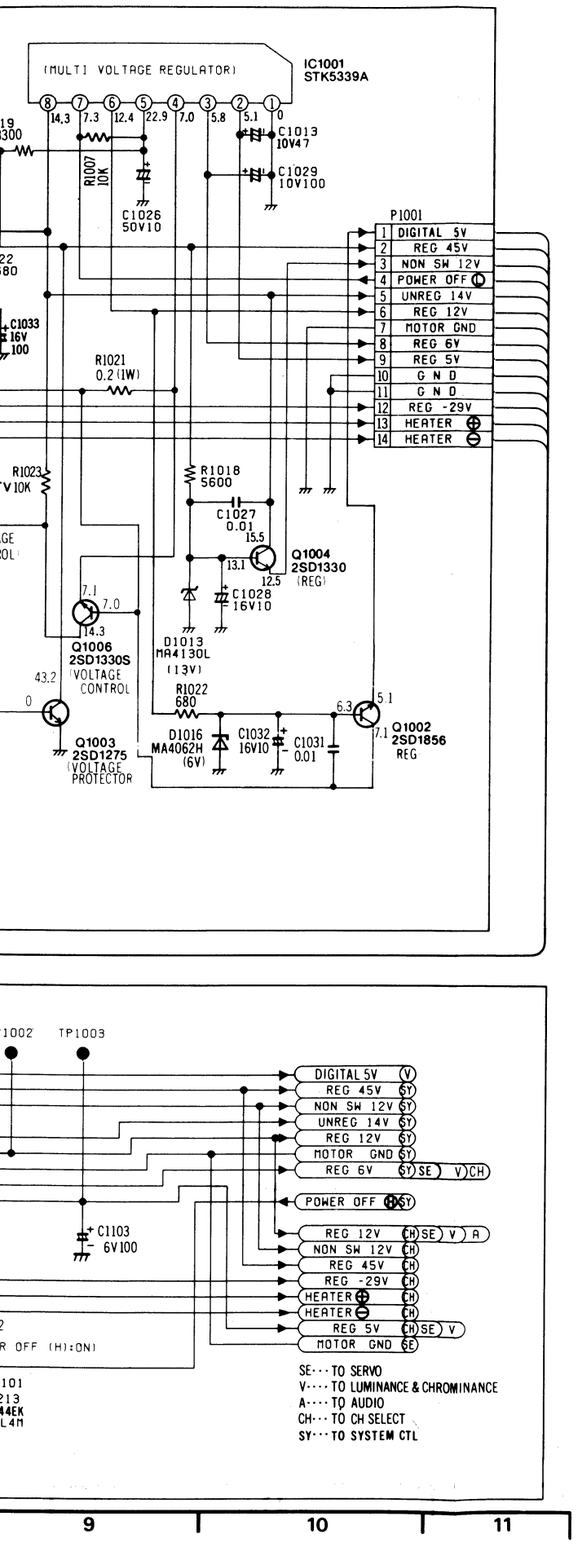

POWER C.B.A.	
Transistor	
Q1001	B-3
Q1002	B-5
Q1003	B-5
Q1004	B-5
Q1006	B-4
Transistor & Resistor	
QR1001	B-5
Integrated Circuit	
IC1001	B-5
Connector	
P1001	B-5

ADDRESS INFORMATION

SUB POWER C.B.A. (VEP01311B) **POWER C.B.A. (VEP01310H: NV-D48EG) (VEP01310J: NV-D48B)**

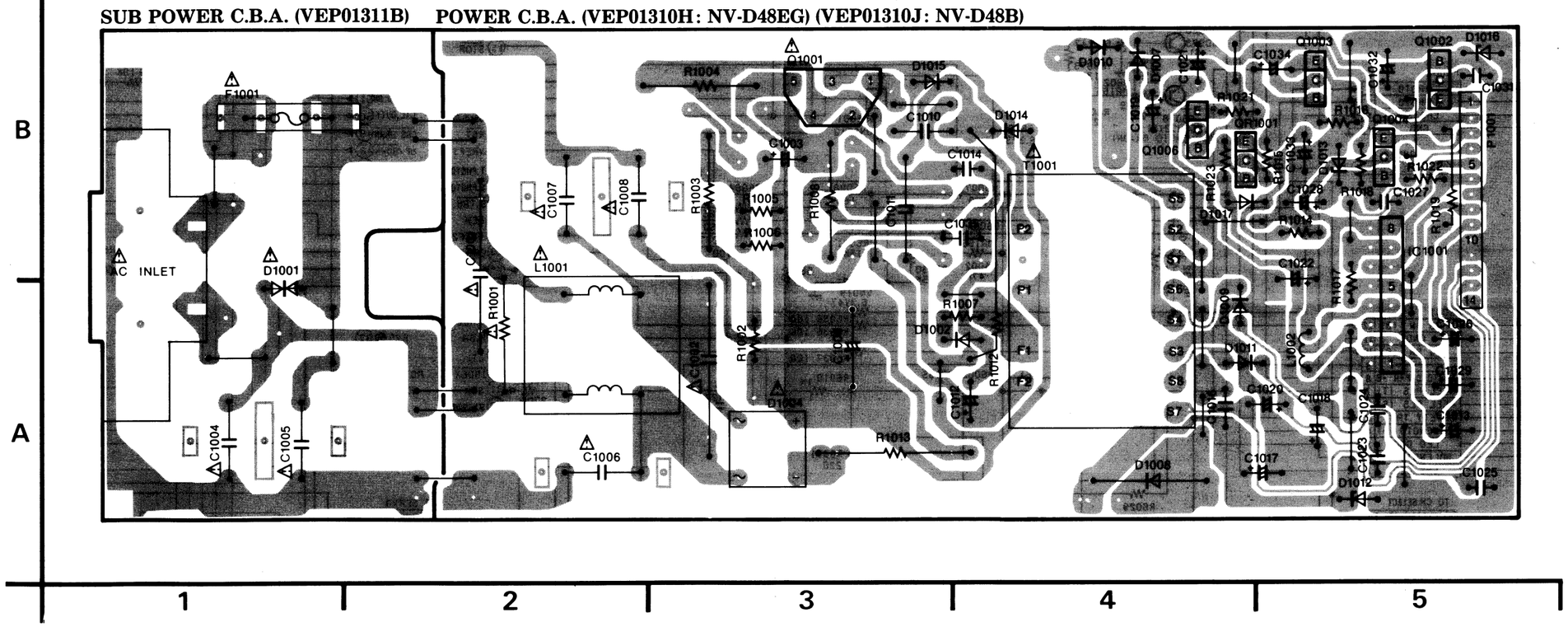

POWER C.B.A.	
Transistor	
Q1001	B-3
Q1002	B-5
Q1003	B-5
Q1004	B-5
Q1006	B-4
Transistor & Resistor	
QR1001	B-5
Integrated Circuit	
IC1001	B-5
Connector	
P1001	B-5

ADDRESS INFORMATION

OWER C.B.A. (VEP01310H: NV-D48EG) (VEP01310J: NV-D48B)

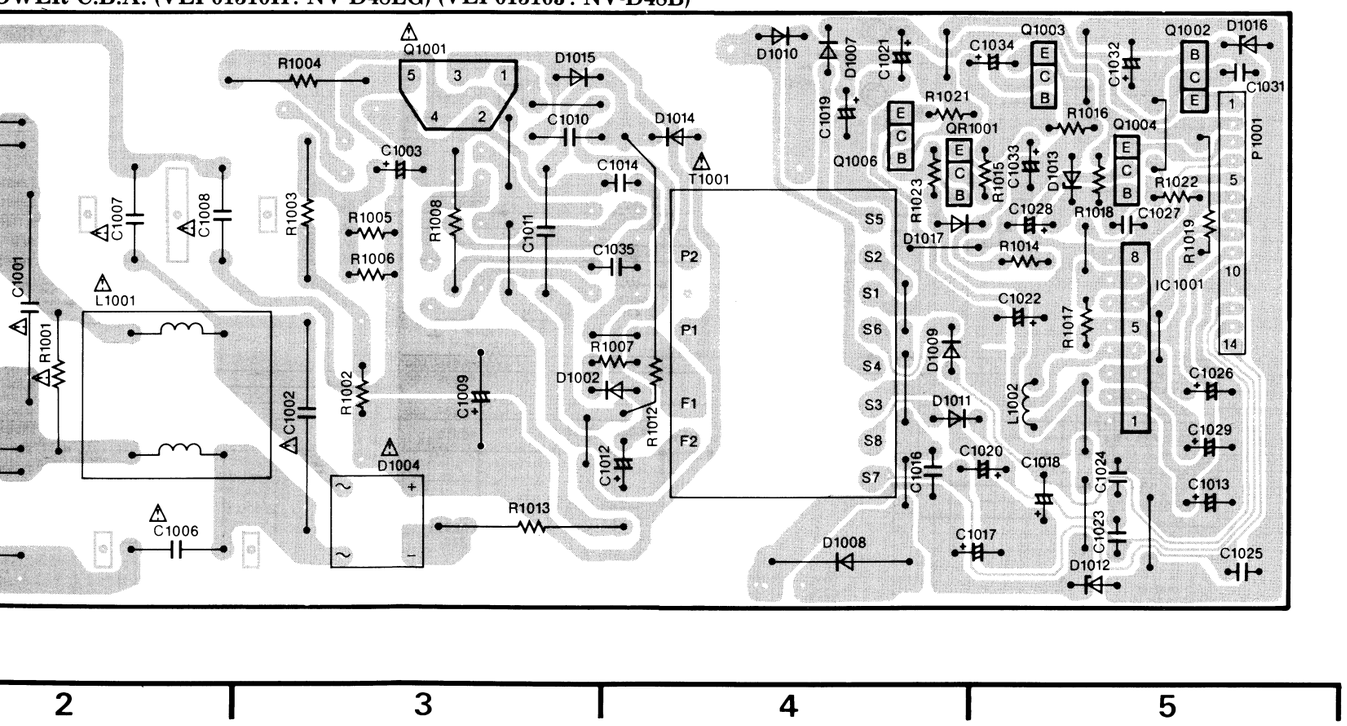

3-7. POWER SUPPLY Section In Main C.B.A. (VEP03493BE: NV-D48EG) (VEP03493BG: NV-D48B)

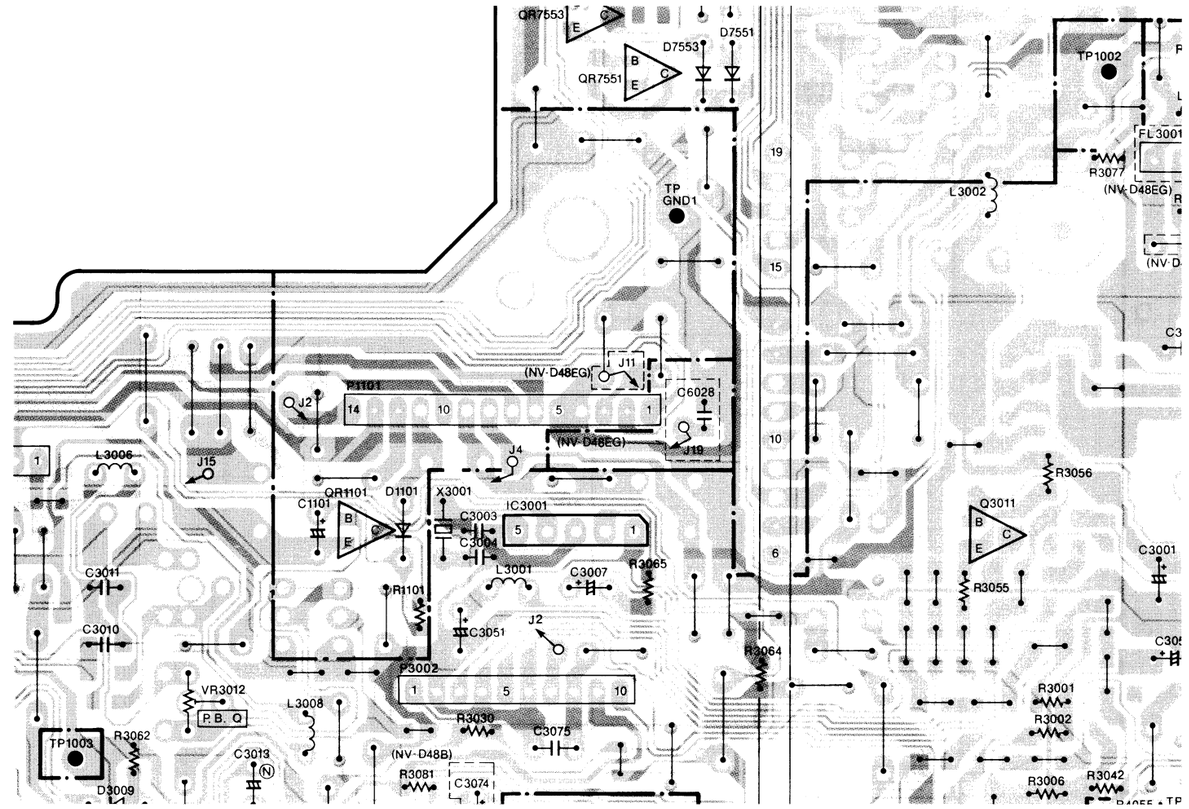

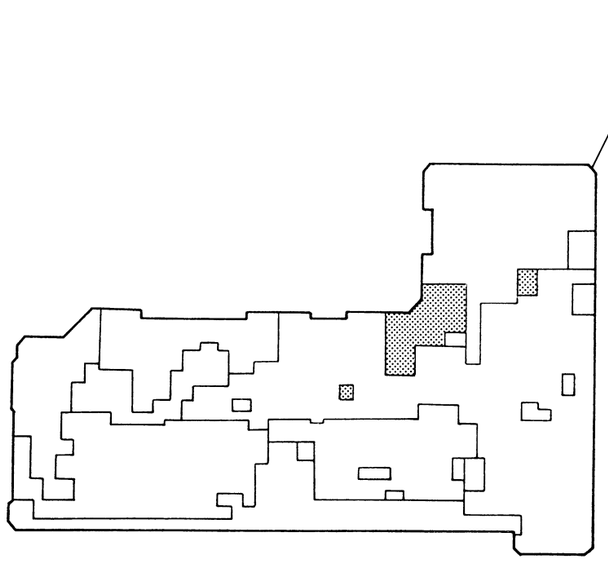

Next Page:
SYSTEM CONTROL & SERVO Section

3-8. SYSTEM CONTROL SCHEMATIC DIAGRAM

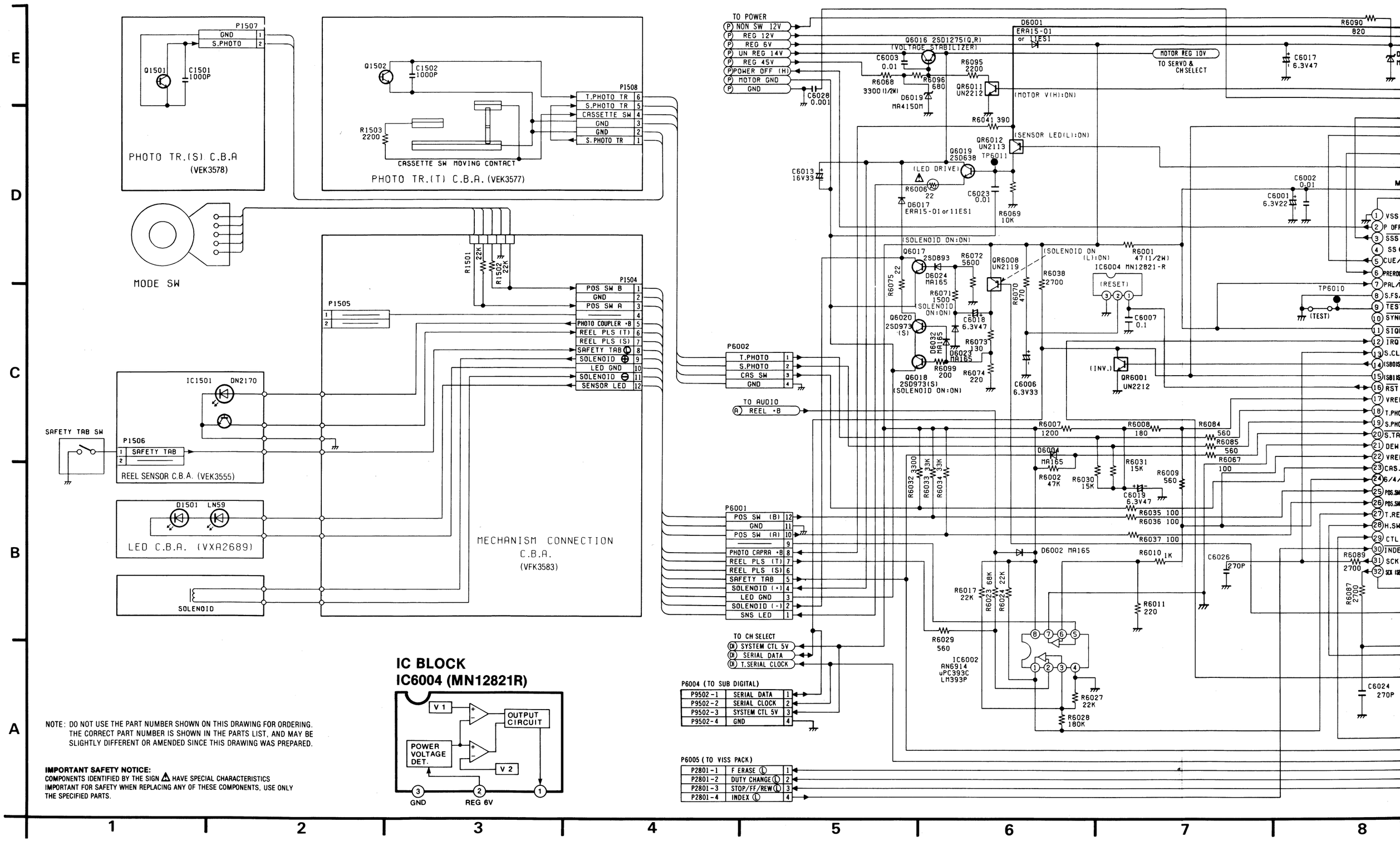

NOTE: DO NOT USE THE PART NUMBER SHOWN ON THIS DRAWING FOR ORDERING. THE CORRECT PART NUMBER IS SHOWN IN THE PARTS LIST, AND MAY BE SLIGHTLY DIFFERENT OR AMENDED SINCE THIS DRAWING WAS PREPARED.

IMPORTANT SAFETY NOTICE:
COMPONENTS IDENTIFIED BY THE SIGN ⚠ HAVE SPECIAL CHARACTERISTICS IMPORTANT FOR SAFETY WHEN REPLACING ANY OF THESE COMPONENTS, USE ONLY THE SPECIFIED PARTS.

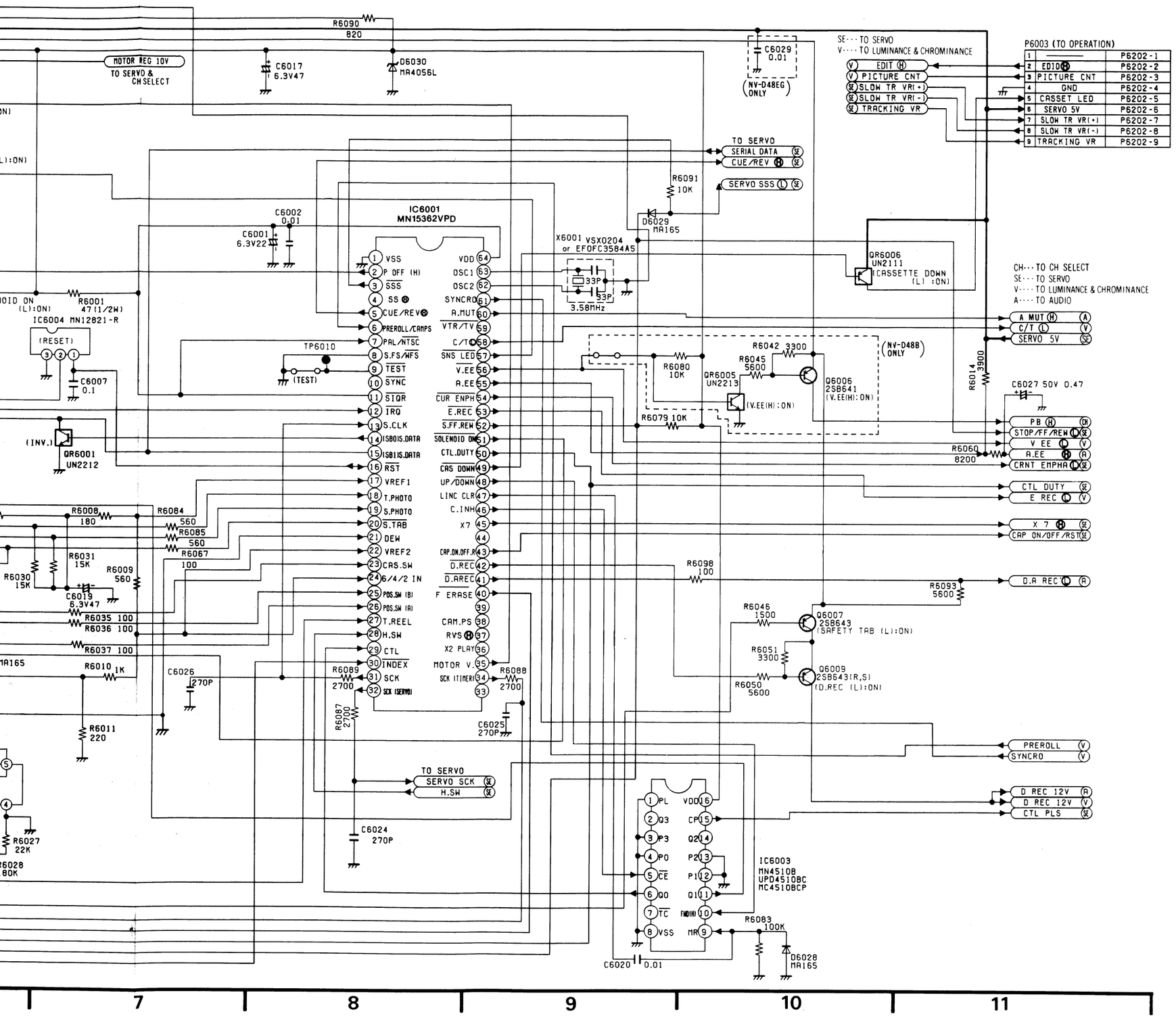

3-9. SERVO SCHEMATIC DIAGRAM

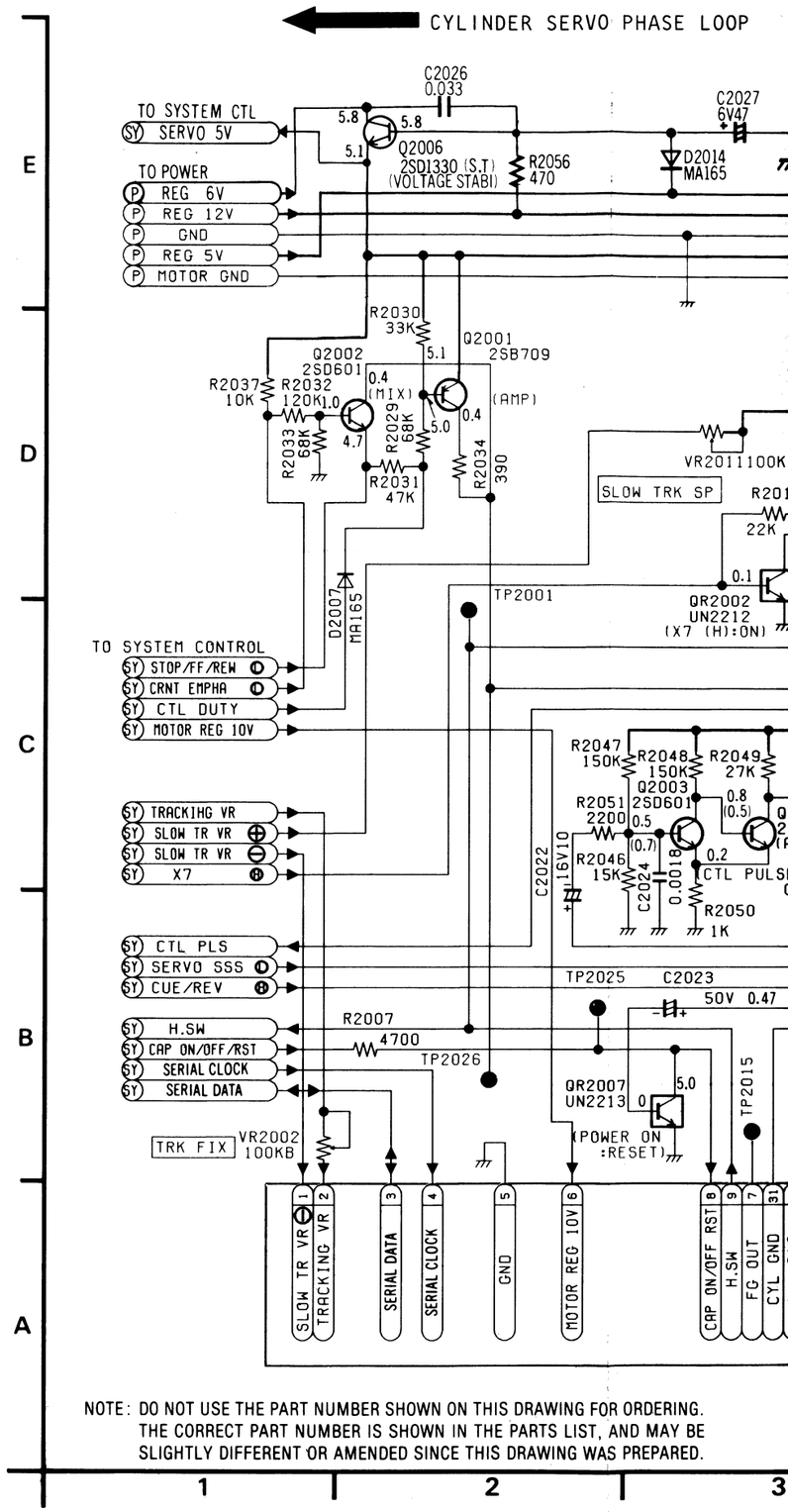

NOTE: DO NOT USE THE PART NUMBER SHOWN ON THIS DRAWING FOR ORDERING. THE CORRECT PART NUMBER IS SHOWN IN THE PARTS LIST, AND MAY BE SLIGHTLY DIFFERENT OR AMENDED SINCE THIS DRAWING WAS PREPARED.

3-9. SERVO SCHEMATIC DIAGRAM

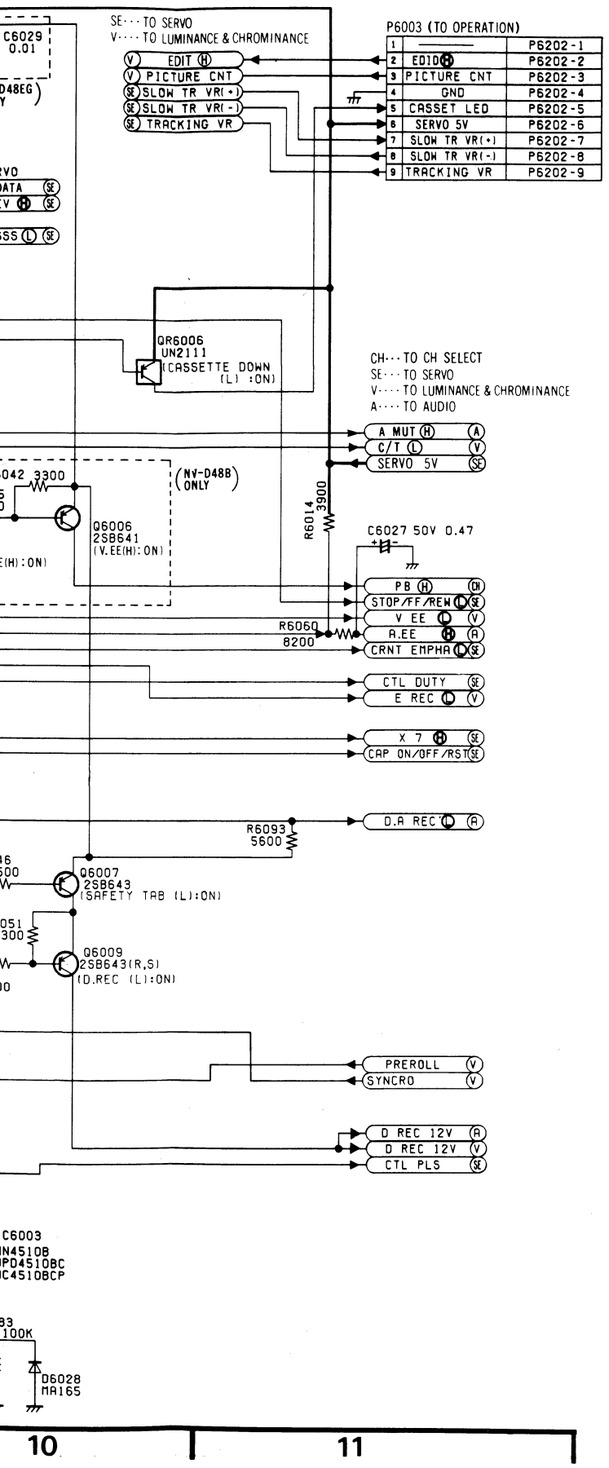

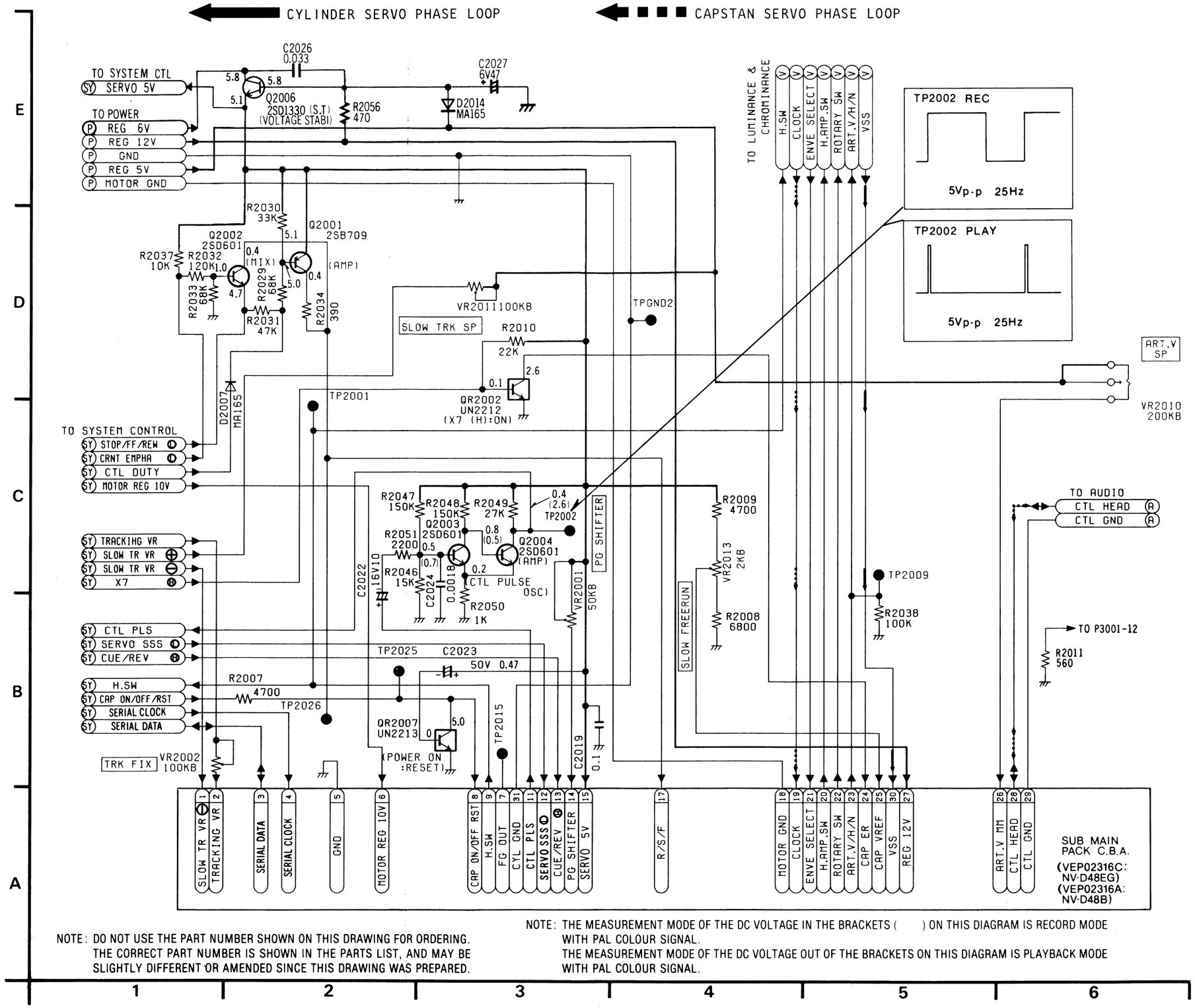

SYSTEM CONTROL ICs VOLTAGE CHART

REF. NO.	IC6001																			
MODE	1	2	3	4	5	6	7	8	9	10	11	12	13	14	15	16	17	18	19	20
STOP	0	0	0	0	0	1.3	5.2	0	0	4.1	5.2	0	4.8	0.3	5.1	5.2	3.0	3.3	3.3	0.5
PLAY	0	0	5.3	0	0	1.6	5.3	0	0	4.1	5.3	0.1	4.8	0.3	5.1	5.2	3.0	3.4	3.4	0.5
REC	0	0	5.2	0	0	1.8	5.2	0	0	4.1	5.2	2.6	4.8	0.3	5.1	5.2	3.0	3.3	3.3	0.5
F.F	0	0	5.1	0	0	1.4	5.2	5.0	0	4.0	5.2	2.0	4.8	0.3	5.1	5.2	3.0	3.3	3.3	0.5
REW	0	0	5.1	0	0	1.4	5.2	0	0	4.0	5.2	2.0	4.8	0.3	5.1	5.2	3.0	3.3	3.3	0.5

REF. NO.	IC6001																			
MODE	21	22	23	24	25	26	27	28	29	30	31	32	33	34	35	36	37	38	39	40
STOP	0	2.1	2.1	2.1	2.2	5.3	5.1	0	5.4	4.6	4.8	5.2	5.1	4.8	0	0	0	5.2	1.3	1.3
PLAY	0	2.1	2.1	2.1	5.4	0	2.6	2.6	2.6	0.5	4.8	5.2	5.1	4.8	5.2	0	0	5.3	1.3	1.3
REC	0	2.1	2.1	2.1	5.4	0	2.6	2.6	2.6	0.5	4.8	5.2	5.1	4.8	5.2	0	0.1	5.3	0.1	0.1
F.F	0	2.0	2.1	2.0	2.2	5.3	2.6	0	2.7	5.1	4.8	5.1	5.0	4.8	0	0	0	5.2	1.3	1.3
REW	0	2.0	2.1	2.0	2.2	5.3	2.6	0	2.7	4.6	4.8	5.1	5.0	4.8	0	0	0	5.2	1.4	1.4

REF. NO.	IC6001																			
MODE	41	42	43	44	45	46	47	48	49	50	51	52	53	54	55	56	57	58	59	60
STOP	10.0	12.3	1.7	0	0.1	5.2	5.2	0	0.1	5.0	5.3	0	0.3	0	5.0	0.1	4.4	0.1	0	0
PLAY	10.0	12.3	5.3	0	0.1	0	5.3	5.3	0.1	5.1	5.4	4.5	0.3	4.7	0.1	5.0	4.5	0.1	5.0	0
REC	0.3	0.3	5.2	0.1	0.1	0.1	5.2	5.2	0.1	5.1	5.4	4.5	5.1	4.7	5.1	0.1	4.4	0.1	0	0
F.F	10.0	12.3	5.2	0	0.1	0	5.2	5.2	0.1	5.0	5.3	0.1	0.3	0	5.0	0.1	4.4	0.1	0	0
REW	10.0	12.3	5.2	0	0.1	0	5.2	0	0.1	5.0	5.3	0.1	0.3	0	5.0	0.1	4.4	0.1	0	0

REF. NO.	IC6001																			
MODE	61	62	63	64																
STOP	5.2	2.1	2.3	5.2																
PLAY	5.3	2.1	2.3	5.3																
REC	5.3	2.1	2.3	5.3																
F.F	5.2	2.1	2.3	5.2																
REW	5.2	2.1	2.3	5.2																

REF. NO.	IC6002																			
MODE	1	2	3	4	5	6	7	8												
STOP	0	5.2	2.4	0	1.0	0.4	0.9	5.1												
PLAY	2.6	2.6	2.6	0	0.9	0.4	0.8	5.1												
REC	2.6	2.6	2.6	0	0.9	0.4	0.7	5.1												
F.F	2.6	2.6	2.6	0	0.8	0.4	0.7	5.1												
REW	2.6	2.6	2.6	0	0.9	0.4	0.8	5.1												

REF. NO.	IC6003																			
MODE	1	2	3	4	5	6	7	8	9	10	11	12	13	14	15	16				
STOP	0	0	0	0	5.2	5.4	5.4	0	0	0	0	0	0	5.4	0.9	5.4				
PLAY	0	2.6	0	0	0	2.6	5.4	0	0	5.3	0	0	0	2.6	0.4	5.4				
REC	0	2.6	0	0	0.1	2.6	5.4	0	0	5.3	2.6	0	0	2.6	2.6	5.4				
F.F	0	1.0	0	0	0	2.7	4.8	0	0	5.2	2.0	0	0	2.0	1.2	5.4				
REW	0	1.0	0	0	0	2.7	4.8	0	0	0	2.2	0	0	2.1	1.2	5.3				

REF. NO.	IC6004																			
MODE	1	2	3																	
STOP	5.2	5.4	0																	
PLAY	5.2	5.4	0																	
REC	5.2	5.4	0																	
F.F	5.2	5.4	0																	
REW	5.2	5.4	0																	

SYSTEM CONTROL TRANSISTORs VOLTAGE CHART

REF. NO.	Q6006			Q6007			Q6009			Q6016			Q6017			Q6018		
MODE	E	C	B	E	C	B	E	C	B	E	C	B	E	C	B	E	C	B
STOP	12.3	0	12.3	12.3	12.3	11.6	12.3	−0.2	12.3	14.5	15.6	15.7	0	15.6	0.1	0	0	0
PLAY	12.3	12.1	11.4	12.3	12.3	11.6	12.3	−0.2	12.3	10.7	15.3	11.9	0	15.3	0.2	0	0	0
REC	12.3	0	12.3	12.3	12.1	11.5	12.1	11.9	11.4	10.7	15.3	11.9	0	15.3	0.2	0	0	0
F.F	12.3	0	12.3	12.3	12.3	11.6	12.3	−0.2	12.3	14.5	15.6	15.7	0	15.6	0.1	0	0	0
REW	12.3	0	12.3	12.3	12.3	11.6	12.3	−0.2	12.3	14.5	15.6	15.7	0	15.6	0.1	0	0	0

REF. NO.	Q6019			Q6020		
MODE	E	C	B	E	C	B
STOP	0.6	14.5	0.5	0	15.6	0
PLAY	0.6	10.7	0.5	0	15.3	0
REC	0.6	10.7	0.5	0	15.3	0
F.F	0.6	14.4	0.5	0	15.6	0
REW	0.6	14.4	0.5	0	15.6	0

REF. NO.	QR6001			QR6005			QR6006			QR6008			QR6011			QR6012		
MODE	E	C	B	E	C	B	E	C	B	E	C	B	E	C	B	E	C	B
STOP	0	5.1	0.3	0	12.3	0.1	5.0	4.9	0.1	5.4	0	5.4	0	15.7	0	5.0	0.6	4.4
PLAY	0	5.1	0.3	0	0.1	5.0	5.0	4.9	0.1	5.4	0	5.4	0	0.1	5.2	5.0	0.6	4.4
REC	0	5.1	0.2	0	12.3	0.1	5.1	4.9	0.1	5.4	0	5.4	0	0.1	5.2	5.1	0.6	4.5
F.F	0	5.1	0.3	0	12.3	0.1	5.0	4.9	0.1	5.4	0	5.4	0	15.7	0	5.0	0.6	4.4
REW	0	5.1	0.3	0	12.3	0.1	5.0	4.9	0.1	5.4	0	5.4	0	15.7	0	5.0	0.6	4.4

SYSTEM CONTROL Section

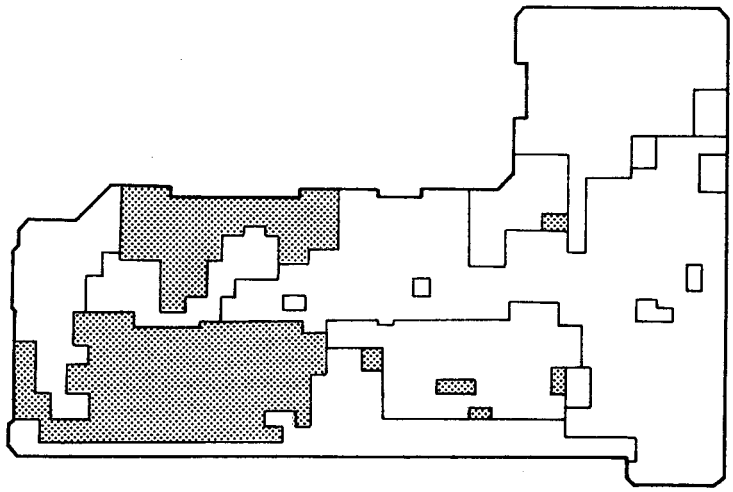

SERVO Section

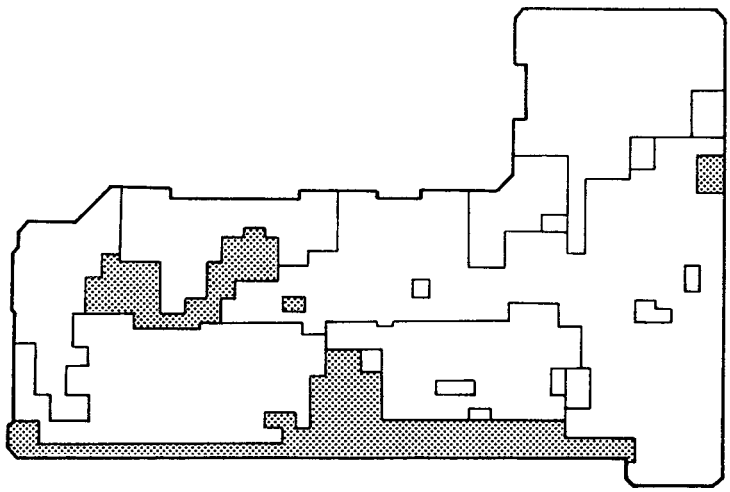

3-10. SYSTEM CONTROL & SERVO Section In Main C.B.A. (VEP03493BE: NV-D48EG) (VEP03493BG: NV-D48B)

MECHANISM CONNECTION C.B.A. (VEK3583)

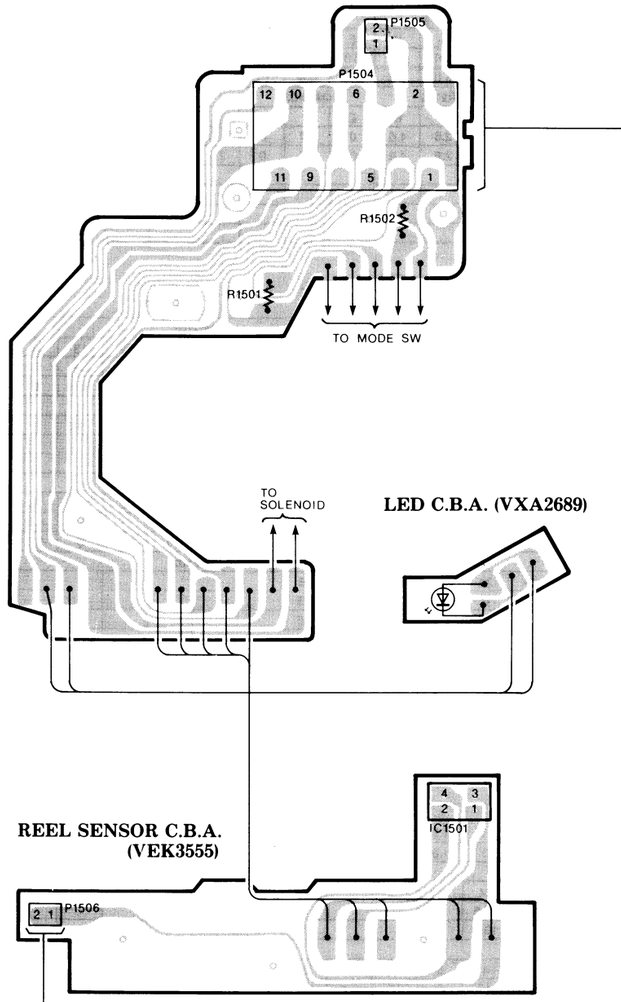

LED C.B.A. (VXA2689)

REEL SENSOR C.B.A. (VEK3555)

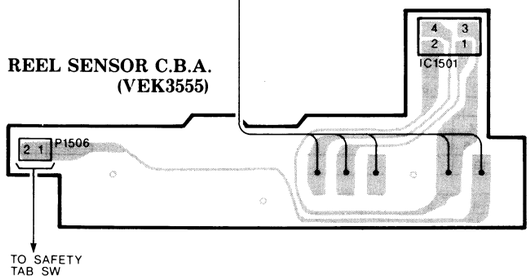

PHOTO Tr. (T) C.B.A. (VEK3577)

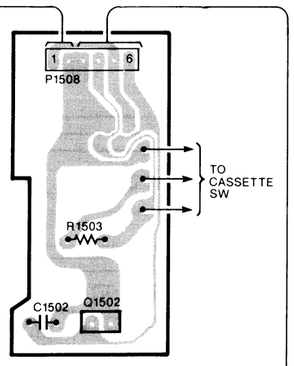

PHOTO Tr. (S) C.B.A. (VEK3578)

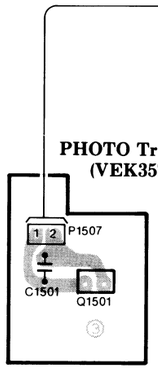

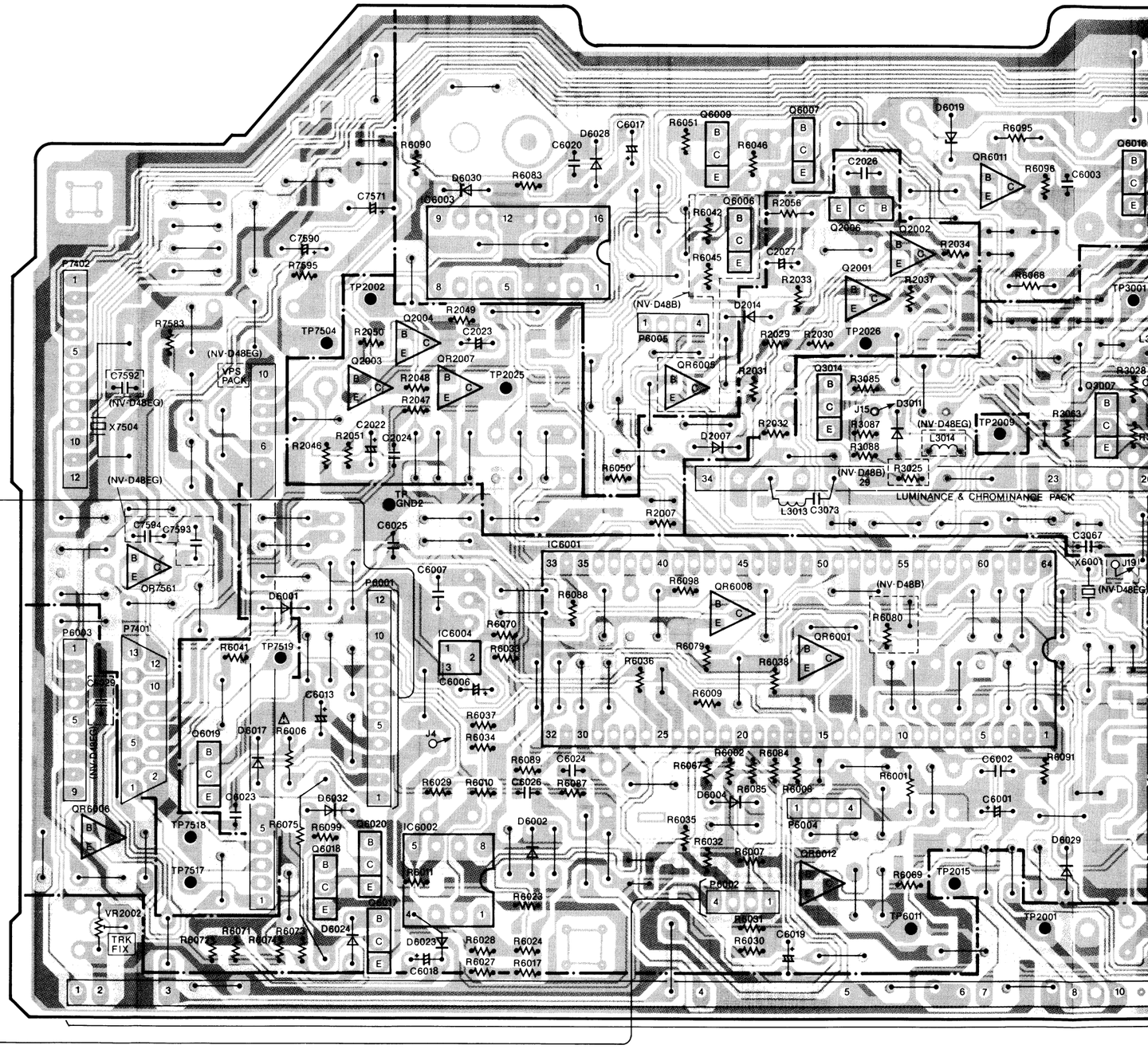

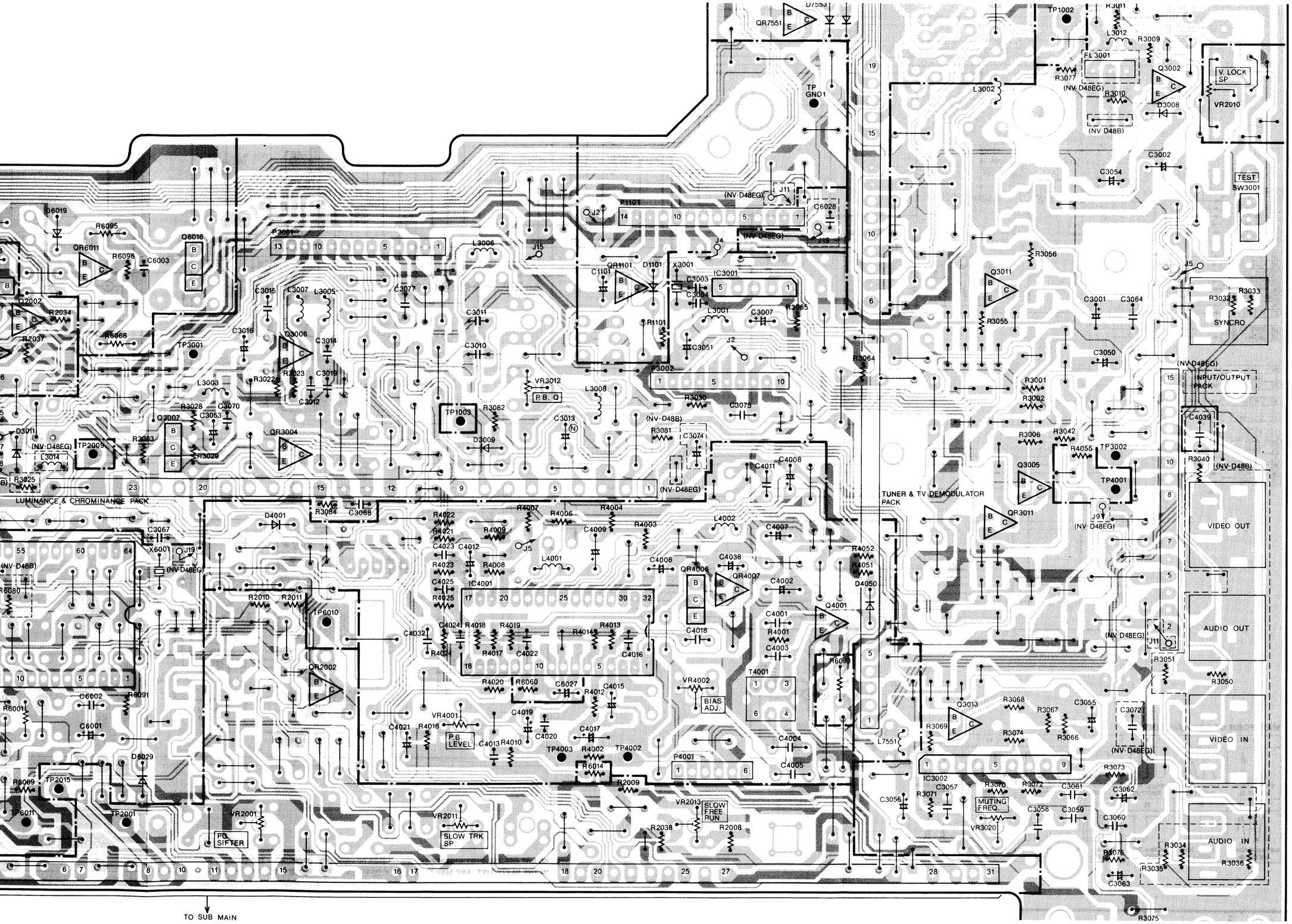
LUMINANCE & CHROMINANCE PACK
TUNER & TV DEMODULATOR PACK
INPUT/OUTPUT PACK
VIDEO OUT
AUDIO OUT
VIDEO IN
AUDIO IN
V. LOCK SP
TEST
SYNCRO
P.B. Q
P.B. LEVEL
BIAS ADJ.
SLOW FREE RUN
SLOW TRK SP
PG SIFTER
MUTING FREQ.
TO SUB MAIN

3-11. SUB MAIN PACK SCHEMATIC DIAGRAM

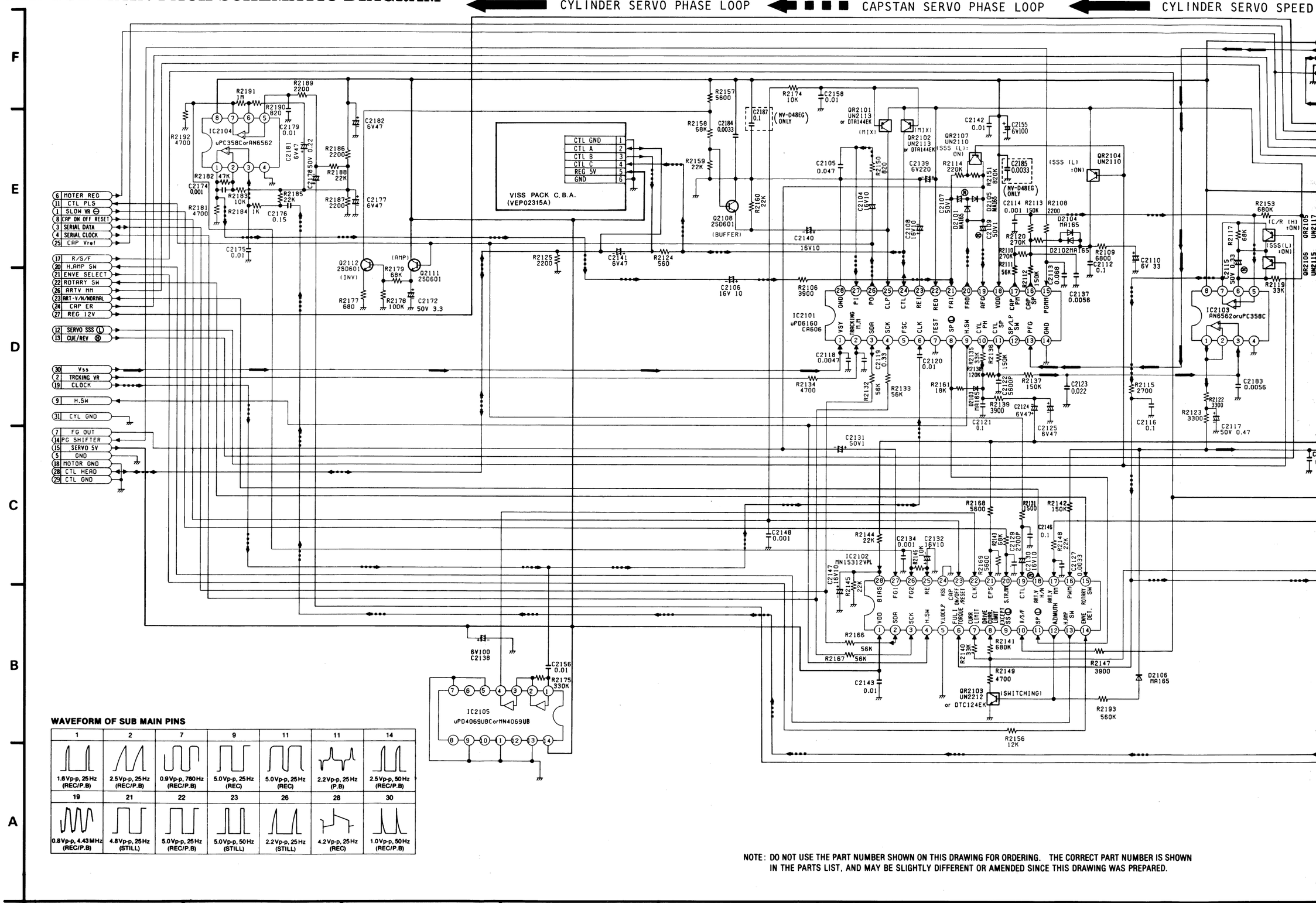

NOTE: DO NOT USE THE PART NUMBER SHOWN ON THIS DRAWING FOR ORDERING. THE CORRECT PART NUMBER IS SHOWN IN THE PARTS LIST, AND MAY BE SLIGHTLY DIFFERENT OR AMENDED SINCE THIS DRAWING WAS PREPARED.

Back Page:
SYSTEM CONTROL
& SERVO Section

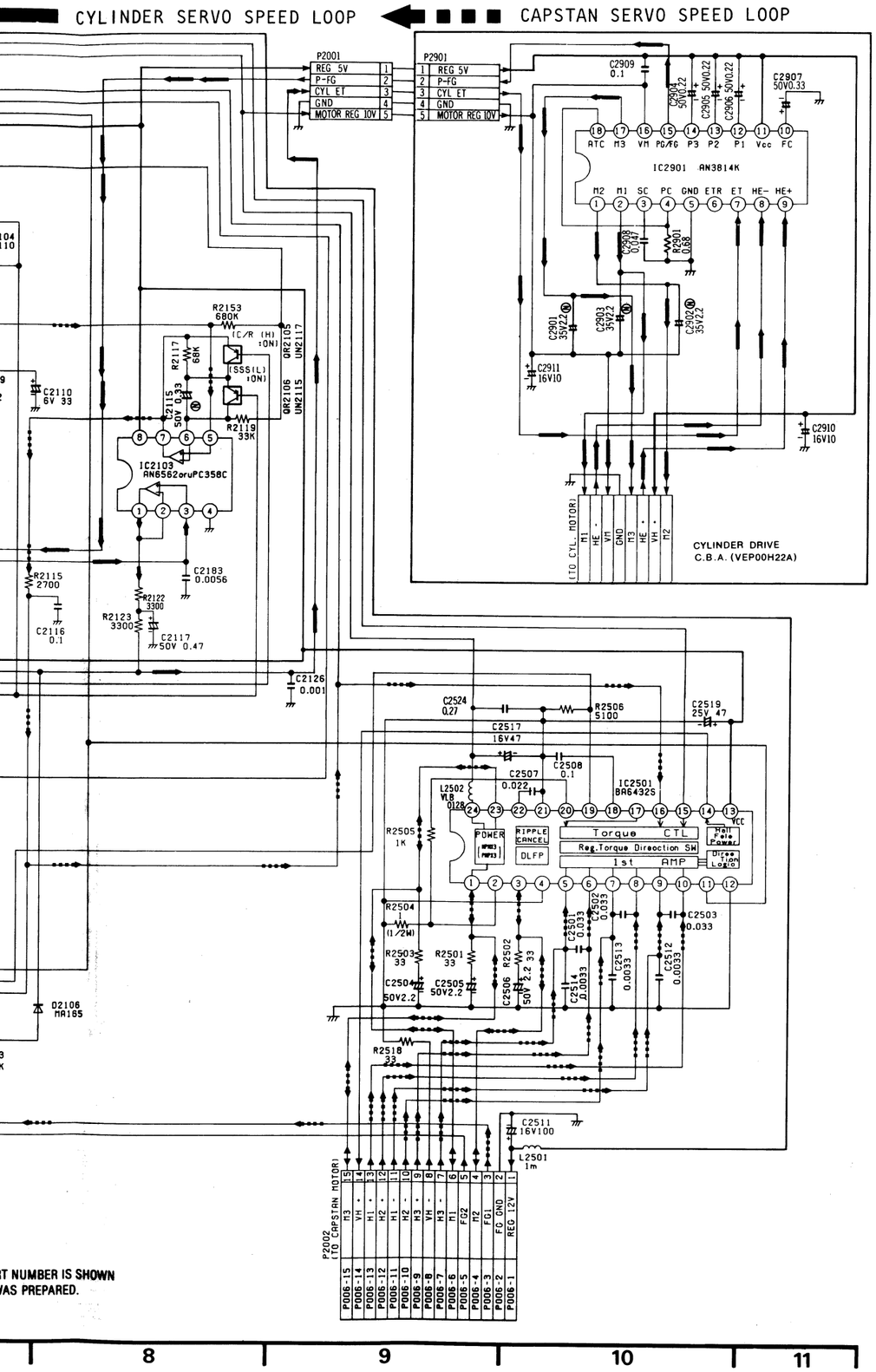

SUB MAIN TRANSISTORS VOLTAGE CHART

REF. NO.	Q2108			Q2111			Q2112											
MODE	E	C	B	E	C	B	E	C	B									
PLAY	0	0	0.5	1.6	5.0	1.2	0.3	2.4	0.9									
REC	0	0	0.2	3.0	5.0	2.6	0.6	0.6	1.2									
REF. NO.	QR2101			QR2102			QR2103			QR2104			QR2105			QR2106		
MODE	E	C	B	E	C	B	E	C	B	E	C	B	E	C	B	E	C	B
PLAY	2.5	2.5	4.6	2.5	2.6	4.6	0	0.7	0	2.5	2.5	5.1	2.6	2.6	0	2.6	2.5	5.1
REC	2.5	3.0	4.6	2.5	2.6	4.6	0	0.7	0	2.5	2.6	5.1	2.6	2.6	0	2.6	2.5	5.1
REF. NO.	Q2107																	
MODE	E	C	B															
PLAY	2.5	2.5	5.1															
REC	2.5	2.5	5.1															

SUB MAIN ICs VOLTAGE CHART

REF. NO.	IC2101																			
MODE	1	2	3	4	5	6	7	8	9	10	11	12	13	14	15	16	17	18	19	20
PLAY	2.6	0.8	5.0	5.2	5.0	2.4	0	0	2.6	2.4	2.5	5.0	1.1	0	0.2	2.5	2.6	5.0	2.5	2.5
REC	2.6	0.8	5.0	5.1	5.0	2.4	0	0	2.6	2.4	2.4	5.0	1.1	0	0.2	2.5	2.6	5.0	2.5	2.5
REF. NO.	IC2101																			
MODE	21	22	23	24	25	26	27	28												
PLAY	2.5	2.5	2.5	2.6	2.5	1.3	2.7	0												
REC	2.5	2.5	2.5	2.6	3.0	2.6	2.6	0												
REF. NO.	IC2102																			
MODE	1	2	3	4	5	6	7	8	9	10	11	12	13	14	15	16	17	18	19	20
PLAY	5.0	5.1	5.2	2.6	0	2.6	5.0	0.7	0	0	0	0	0	4.5	2.6	2.4	0.4	0	2.6	0.1
REC	5.0	5.1	5.2	2.6	0	2.6	5.0	0.7	0	0	0	0	0	0.2	2.6	2.4	0.4	0	2.6	0
REF. NO.	IC2102																			
MODE	21	22	23	24	25	26	27	28												
PLAY	2.5	2.2	5.0	0	2.4	2.5	2.6	2.5												
REC	2.5	2.2	5.0	0	2.4	2.5	2.6	2.5												
REF. NO.	IC2103										IC2104									
MODE	1	2	3	4	5	6	7	8			1	2	3	4	5	6	7	8		
PLAY	2.4	2.4	2.5	0	2.5	2.5	2.6	5.0			2.5	2.5	2.5	0	2.5	2.5	2.5	5.0		
REC	2.4	2.4	2.5	0	2.5	2.5	2.6	5.0			2.5	2.5	2.5	0	2.5	2.5	2.5	5.0		
REF. NO.	IC2105																			
MODE	1	2	3	4	5	6	7	8	9	10	11	12	13	14						
PLAY	2.4	2.4	2.4	2.2	0	5.0	0	5.0	0	5.0	0	5.0	0	5.0						
REC	2.4	2.4	2.4	2.2	0	5.0	0	5.0	0	5.0	0	5.0	0	5.0						
REF. NO.	IC2501																			
MODE	1	2	3	4	5	6	7	8	9	10	11	12	13	14	15	16	17	18	19	20
PLAY	1.4	0.1	1.6	0	1.8	1.8	1.9	1.9	1.9	1.9	0.4	0	5.0	3.3	2.9	2.6	4.2	4.0	0.7	0.1
REC	1.4	0.1	1.6	0	1.8	1.8	1.9	1.9	1.9	1.9	0.4	0	5.0	3.3	2.9	2.6	4.2	4.0	0.7	0.1
REF. NO.	IC2501																			
MODE	21	22	23	24																
PLAY	0	4.3	1.6	10.6																
REC	0	4.3	1.6	10.6																
REF. NO.	IC2901																			
MODE	1	2	3	4	5	6	7	8	9	10	11	12	13	14	15	16	17	18		
PLAY	10.5	10.5	0.1	0.5	0	2.5	2.4	0.6	0.5	2.7	5.0	3.7	3.7	3.7	1.1	10.6	10.5	0.1		
REC	10.5	10.5	0.1	0.5	0	2.5	2.4	0.6	0.5	2.7	5.0	3.7	3.7	3.7	1.1	10.6	10.5	0.1		

IC BLOCK
IC2901 (AN3814K)

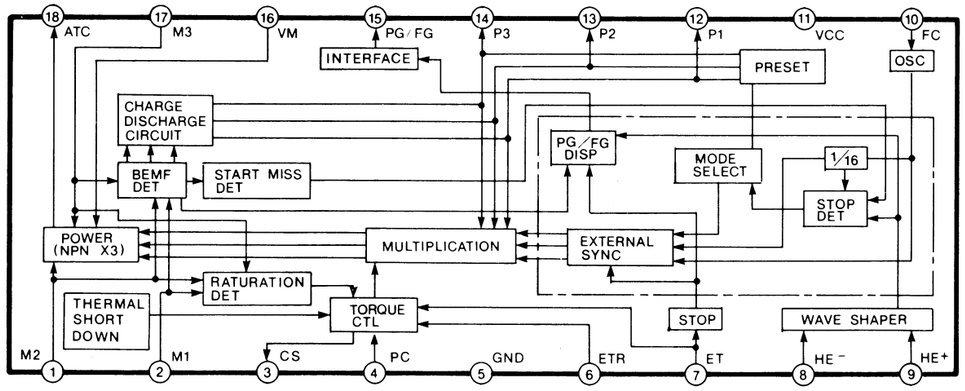

3-12. VISS PACK SCHEMATIC DIAGRAM

CAPSTAN SERVO PHASE LOOP

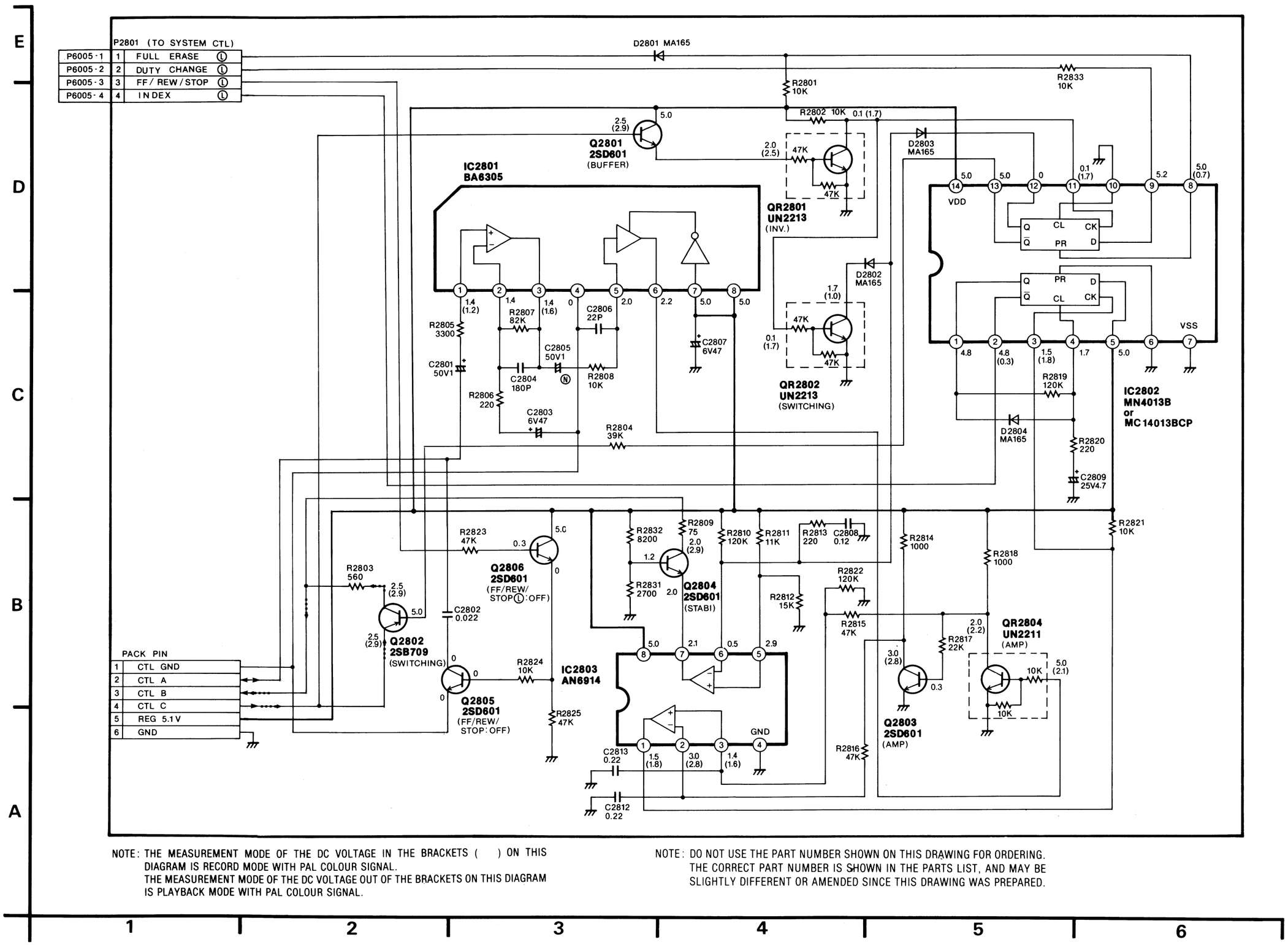

NOTE: THE MEASUREMENT MODE OF THE DC VOLTAGE IN THE BRACKETS ( ) ON THIS DIAGRAM IS RECORD MODE WITH PAL COLOUR SIGNAL.
THE MEASUREMENT MODE OF THE DC VOLTAGE OUT OF THE BRACKETS ON THIS DIAGRAM IS PLAYBACK MODE WITH PAL COLOUR SIGNAL.

NOTE: DO NOT USE THE PART NUMBER SHOWN ON THIS DRAWING FOR ORDERING. THE CORRECT PART NUMBER IS SHOWN IN THE PARTS LIST, AND MAY BE SLIGHTLY DIFFERENT OR AMENDED SINCE THIS DRAWING WAS PREPARED.

3-13. SUB MAIN

SUB MAIN P

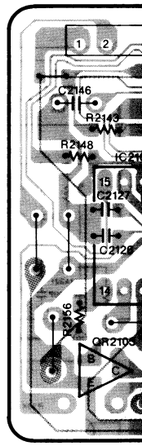

3-13. SUB MAIN PACK C.B.A. (VEP02316C: NV-D48EG) (VEP02316A: NV-D48B) & VISS PACK C.B.A. (VEP02315A)

VISS PACK C.B.A. (VEP02315A)

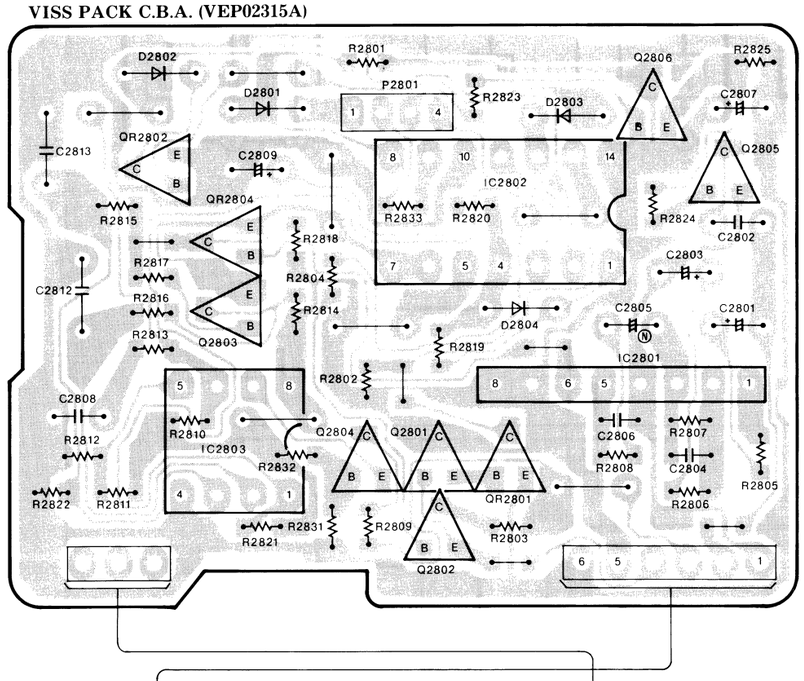

SUB MAIN PACK C.B.A. (VEP02316C: NV-D48EG)(VEP02316A: NV-D48B)

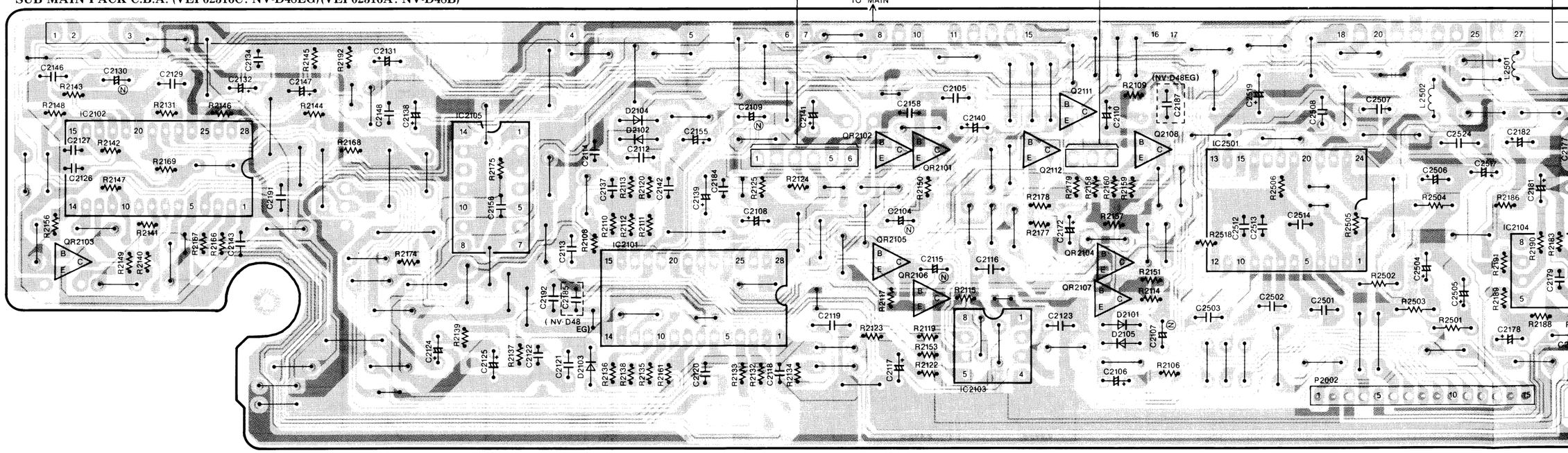

VISS PACK C.B.A. (VEP02315A)

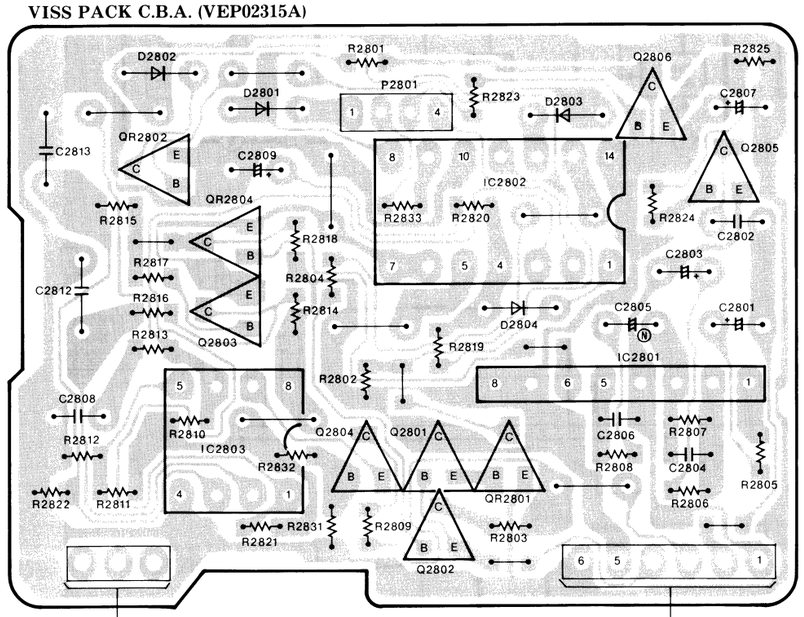

CYLINDER DRIVE C.B.A. (VEP00H22A)

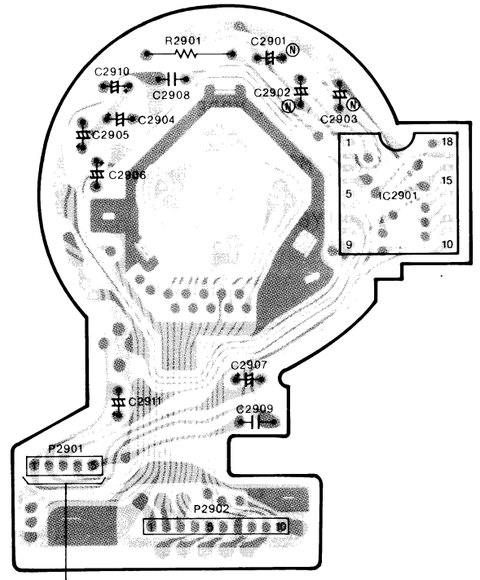

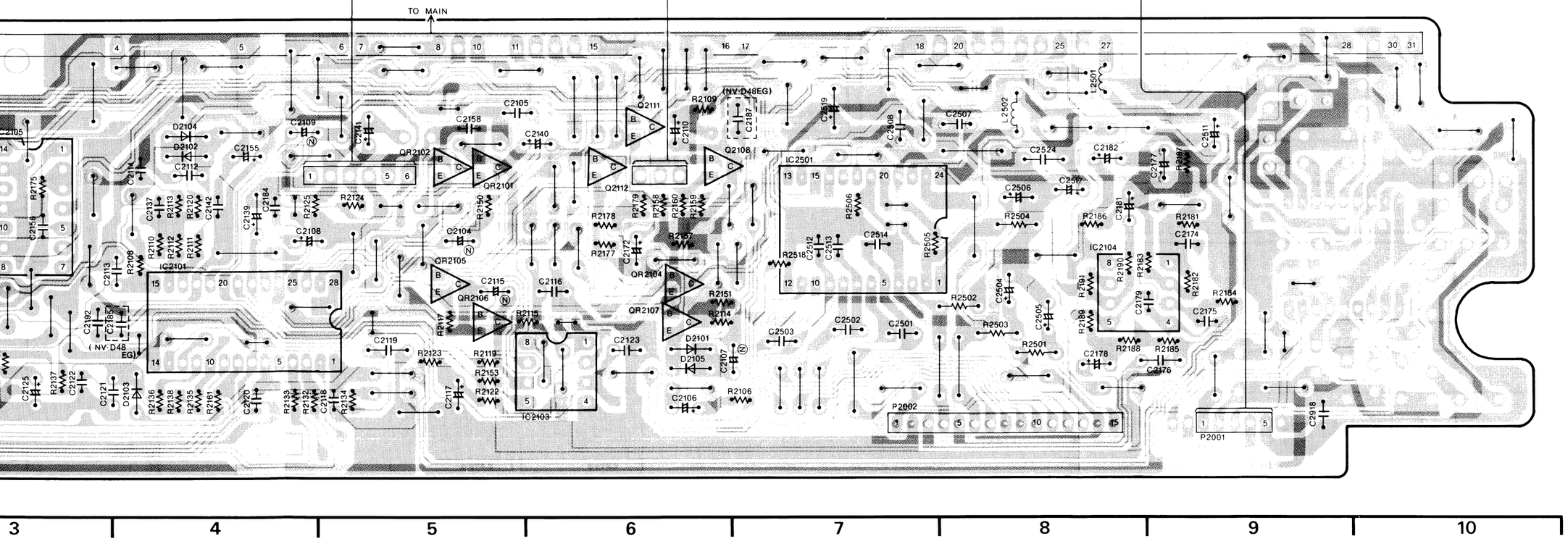

SUB MAIN C.B.A. & VISS PACK C.B.A.	
Transistor	
Q2108	B-6
Q2111	B-6
Q2112	B-6
Q2801	D-6
Q2802	C-6
Q2803	D-5
Q2804	D-5
Q2805	E-7
Q2806	E-6
Transistor & Resistor	
QR2101	B-5
QR2102	B-5
QR2103	B-1
QR2104	B-6
QR2105	B-5
QR2106	B-5
QR2107	A-6
QR2801	D-6
QR2802	E-5
QR2804	E-5
Integrated Circuit	
IC2101	B-4
IC2102	B-1
IC2103	A-6
IC2104	B-8
IC2105	B-3
IC2501	B-7
IC2801	D-6
IC2802	E-6
IC2803	D-5
IC2901	E-10
Connector	
P2001	A-9
P2002	A-7
P2801	E-6
P2901	D-8
P2902	D-9

ADDRESS INFORMATION

Next Page:
LUMINANCE & CHROMINANCE Section

IC301 (VEFH03D)

PIN NO.	WAVEFORM	PIN NO.	WAVEFORM
1	1.0Vp-p (REC/P.B)	22	1.2Vp-p (REC)
2	5.0Vp-p (REC/P.B)	23	1.2Vp-p (P.B)
3	0.8Vp-p (REC/P.B)	26	0.9Vp-p (P.B)
5	0.9Vp-p (REC)	35	0.45Vp-p (P.B)
5	1.0Vp-p (P.B)	37, 38	0.8Vp-p (REC)
7, 8	0.45Vp-p (REC) 0.55Vp-p (P.B)	37, 38	1.0Vp-p (P.B)
11	0.34Vp-p (REC/P.B)	39	0.3Vp-p (PAUSE/STILL)
13, 15	0.9Vp-p (REC/P.B)	40	2.0Vp-p (REC) 2.5Vp-p (P.B)
16	0.65Vp-p (REC/P.B)	41	0.45Vp-p (REC/P.B)
17	0.9Vp-p (REC/P.B)		

IC801 (VEFH04A)

PIN NO.	WAVEFORM	PIN NO.	WAVEFORM
2	0.15Vp-p (REC/P.B)	17	0.5Vp-p (REC) 0.3Vp-p (P.B)
3	0.8Vp-p (REC/P.B)	18	1.1Vp-p (REC) 1.2Vp-p (P.B)
5	0.3Vp-p (REC/P.B)	19	0.25Vp-p (REC/P.B)
6	5.0Vp-p (REC/P.B)	28	0.7Vp-p (REC/P.B)
7	0.6Vp-p (REC) 0.4Vp-p (P.B)	29	1.1Vp-p (REC/P.B)
9	0.45Vp-p (REC) 0.3Vp-p (P.B)	31	0.8Vp-p (REC/P.B)
10	0.9Vp-p (REC)	32	5.0Vp-p (REC/P.B)
10	1.3Vp-p (P.B)	33	0.45Vp-p (REC/P.B)
11	0.4Vp-p (REC) 0.2Vp-p (P.B)	34	5.0Vp-p (REC/P.B)
12	0.9Vp-p (REC/P.B)	35	5.0Vp-p (REC/P.B)
14	0.3Vp-p (REC) 0.2Vp-p (P.B)	38	1.2Vp-p (P.B)
15	0.55Vp-p (REC)		

3-16. LUMINANCE & CHROMINANCE Section In Main C.B.A. (VEP03493BE: NV-D48EG) (VEP03493BG: NV-D48B)

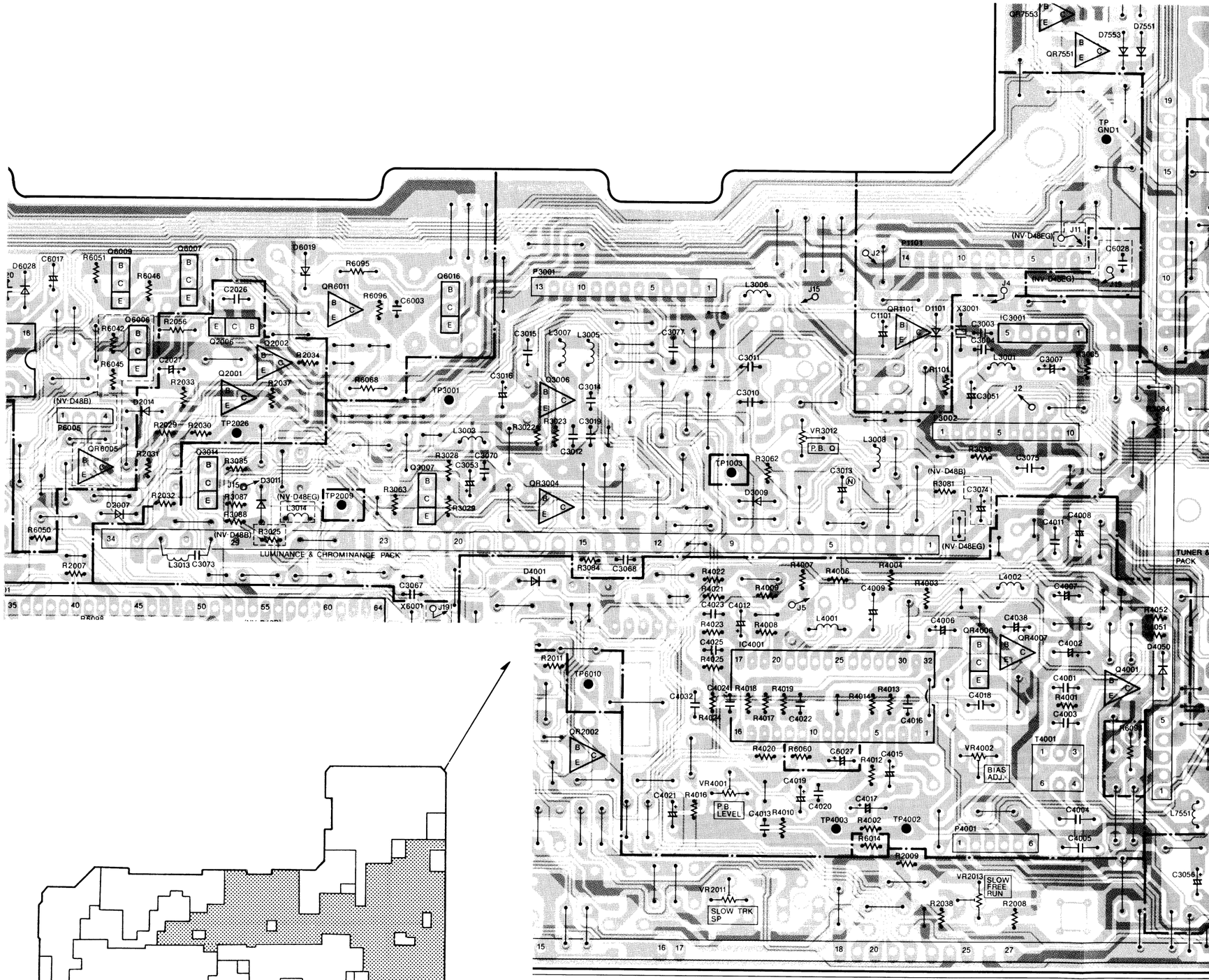

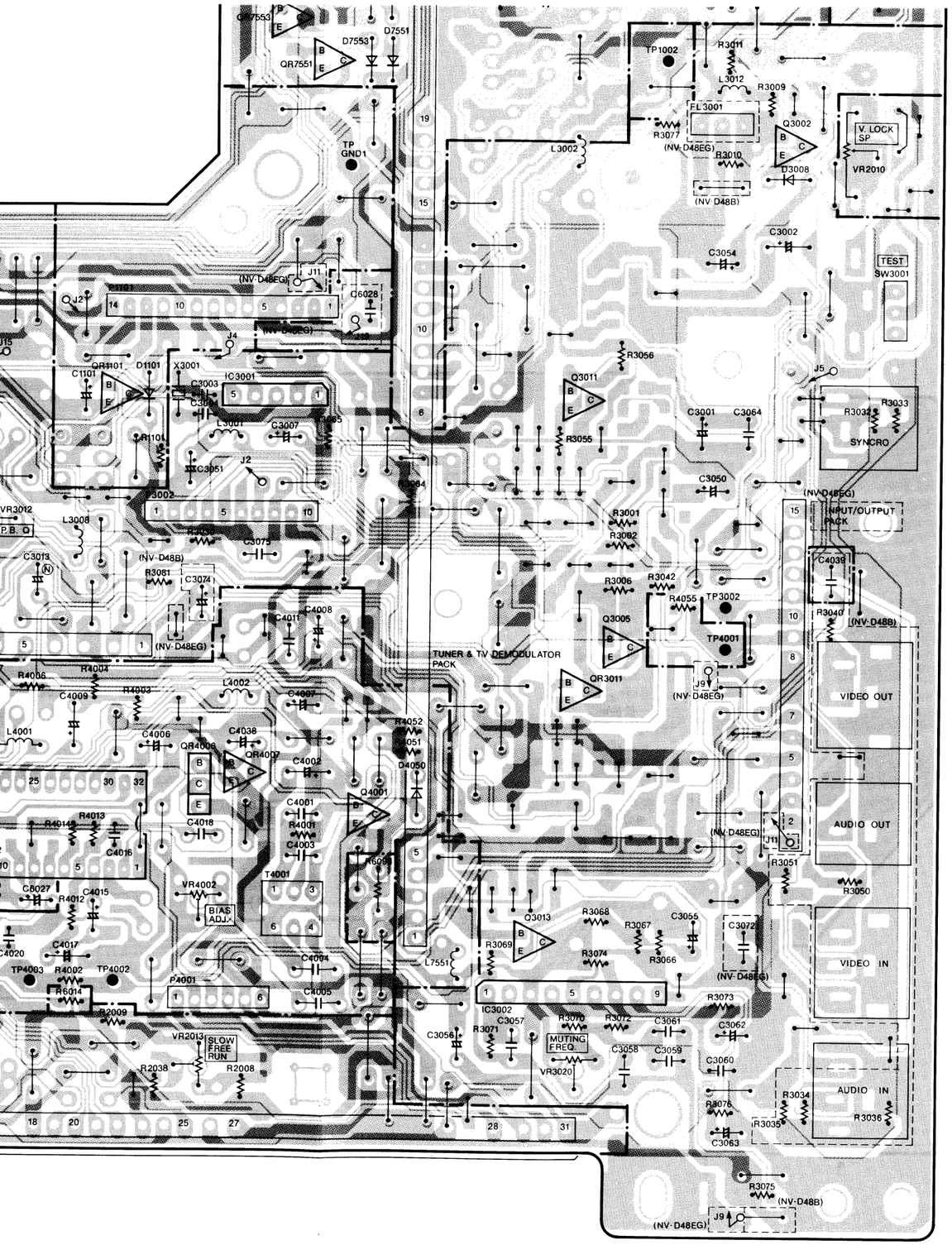

LUMINANCE & CHROMINANCE PACK C.B.A. (VEP03543C: NV-D48B) (VEP03543D: NV-D48B)

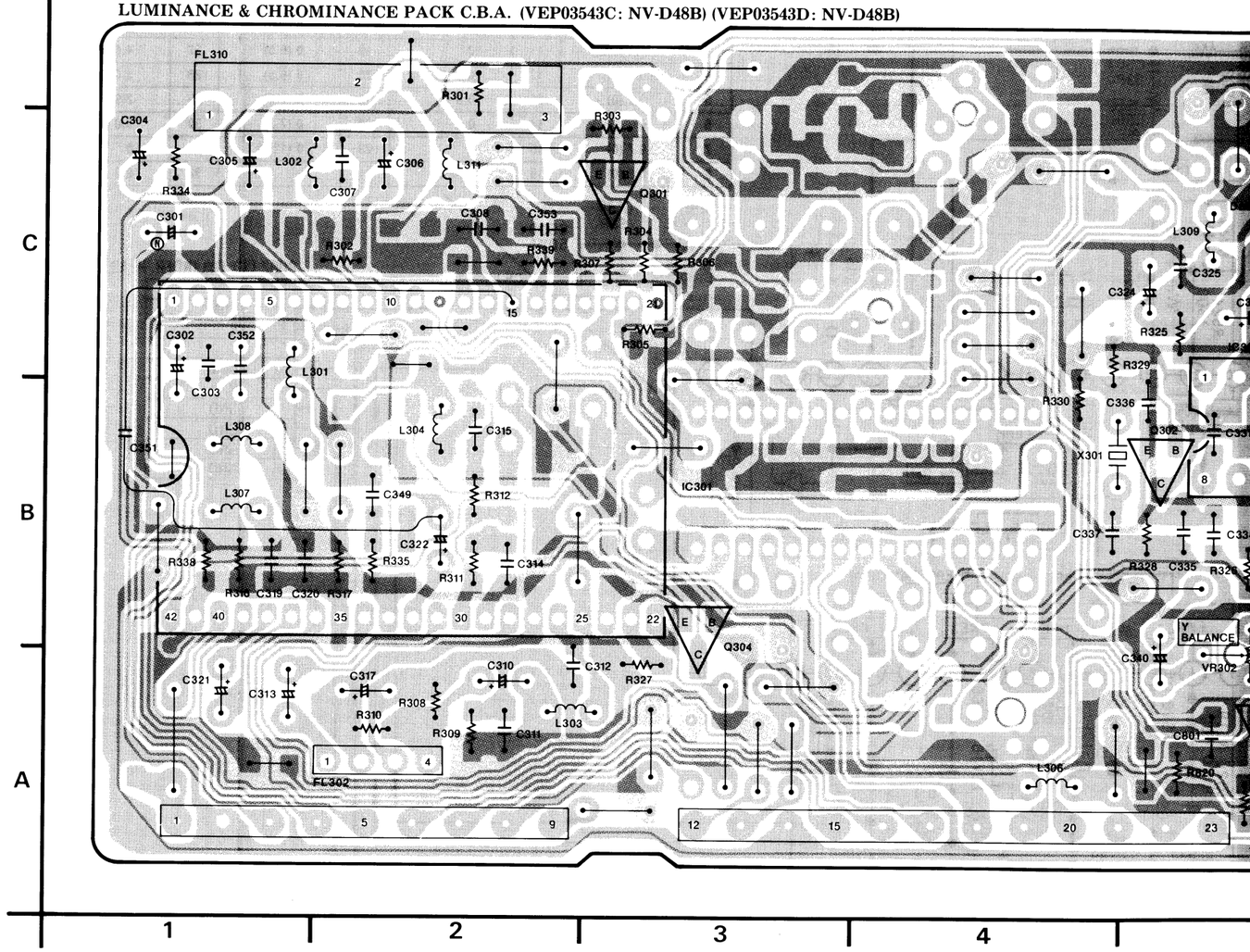

3-17. LUMINANCE & CHROMINANCE PACK C.B.A. (VEP03543C: NV-D48EG) (VEP03543D: NV-D48B)

SECAM PACK C.B.A. (VEP03452B)

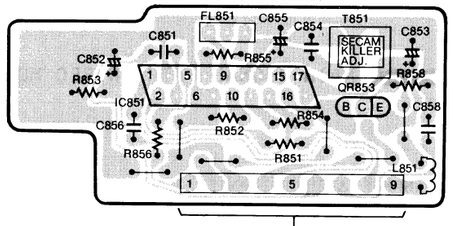

LUMINANCE & CHROMINANCE PACK C.B.A. (VEP03543C: NV-D48B) (VEP03543D: NV-D48B)

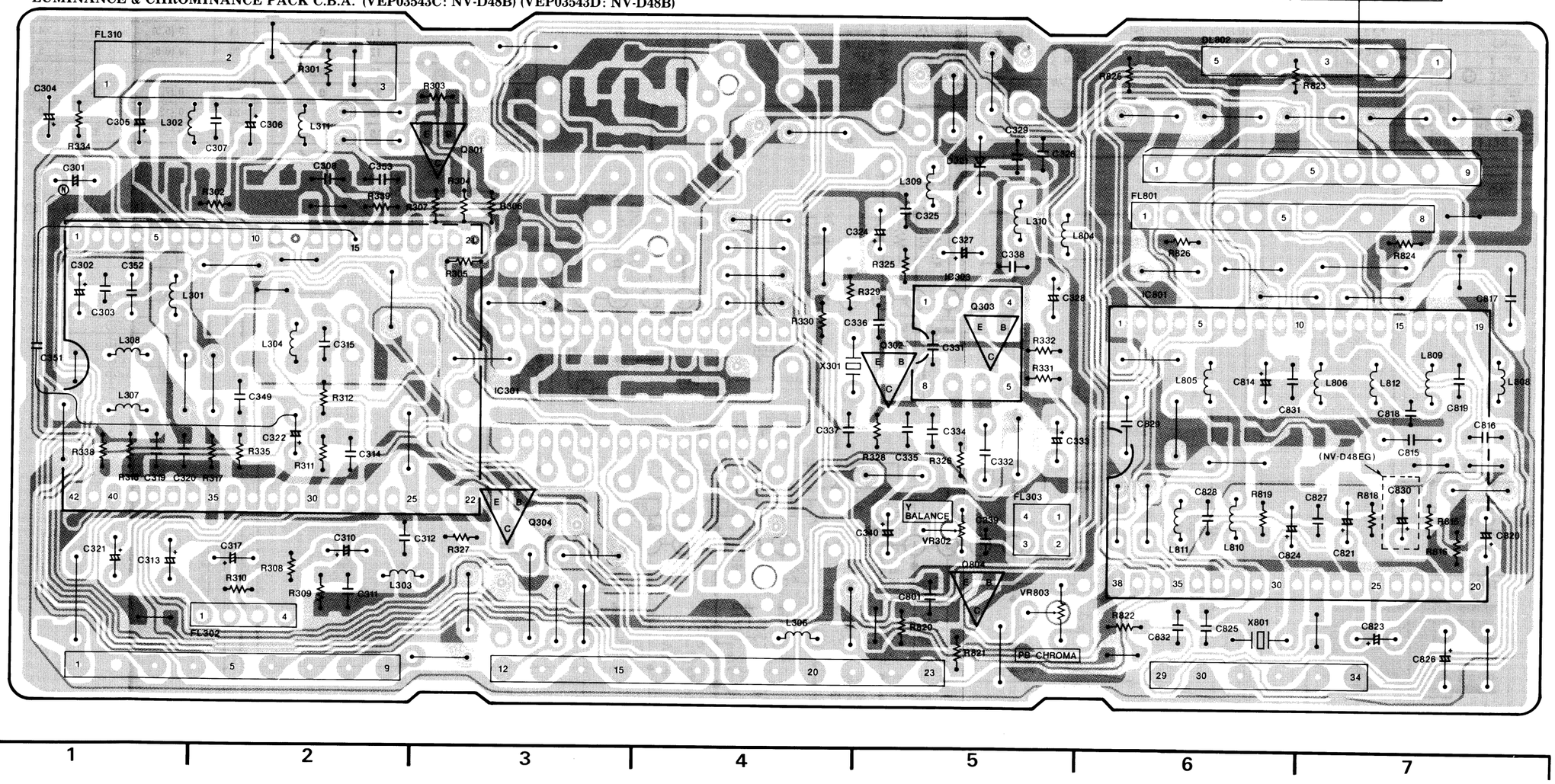

LUMINANCE & CHROMINANCE PACK C.B.A.	
Transistor	
Q301	C-3
Q302	B-5
Q303	C-5
Q304	B-3
Q804	A-5
Transistor & Resistor	
QR853	D-7
Integrated Circuit	
IC301	B-3
IC303	C-5
IC801	C-6
IC851	D-6
Adjustment	
T851	D-7
VR302	A-5
VR803	A-5

ADDRESS INFORMATION

Next Page:
INPUT/OUTPUT & HEAD AMP Section

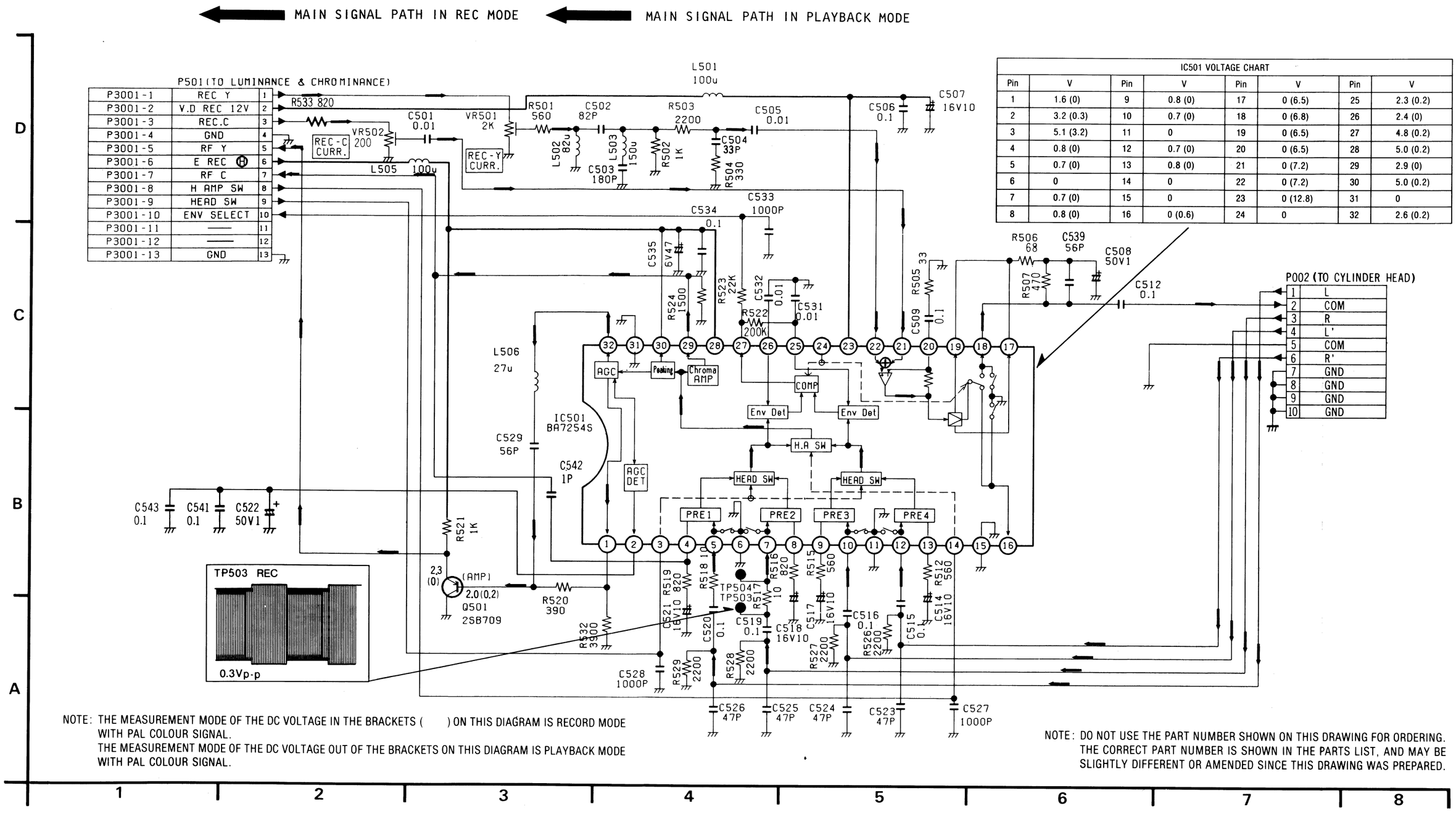

IC501 VOLTAGE CHART							
Pin	V	Pin	V	Pin	V	Pin	V
1	1.6 (0)	9	0.8 (0)	17	0 (6.5)	25	2.3 (0.2)
2	3.2 (0.3)	10	0.7 (0)	18	0 (6.8)	26	2.4 (0)
3	5.1 (3.2)	11	0	19	0 (6.5)	27	4.8 (0.2)
4	0.8 (0)	12	0.7 (0)	20	0 (6.5)	28	5.0 (0.2)
5	0.7 (0)	13	0.8 (0)	21	0 (7.2)	29	2.9 (0)
6	0	14	0	22	0 (7.2)	30	5.0 (0.2)
7	0.7 (0)	15	0	23	0 (12.8)	31	0
8	0.8 (0)	16	0 (0.6)	24	0	32	2.6 (0.2)

NOTE: THE MEASUREMENT MODE OF THE DC VOLTAGE IN THE BRACKETS ( ) ON THIS DIAGRAM IS RECORD MODE WITH PAL COLOUR SIGNAL.
THE MEASUREMENT MODE OF THE DC VOLTAGE OUT OF THE BRACKETS ON THIS DIAGRAM IS PLAYBACK MODE WITH PAL COLOUR SIGNAL.

NOTE: DO NOT USE THE PART NUMBER SHOWN ON THIS DRAWING FOR ORDERING. THE CORRECT PART NUMBER IS SHOWN IN THE PARTS LIST, AND MAY BE SLIGHTLY DIFFERENT OR AMENDED SINCE THIS DRAWING WAS PREPARED.

3-19. HEAD AMP C.B.A. (VEP05118B)

3-20. INPUT/OUTPUT PA

HEAD AMP C.B.A.	
Transistor	
Q501	A-3
Integrated Circuit	
IC501	C-3
Test Point	
TP503 TP504	C-3 C-3
Adjustment	
VR501 VR502	C-4 C-5
Connector	
P002 P501	A-2 C-5

ADDRESS INFORMATION

GE CHART			
Pin	V	Pin	V
17	0 (6.5)	25	2.3 (0.2)
18	0 (6.8)	26	2.4 (0)
19	0 (6.5)	27	4.8 (0.2)
20	0 (6.5)	28	5.0 (0.2)
21	0 (7.2)	29	2.9 (0)
22	0 (7.2)	30	5.0 (0.2)
23	0 (12.8)	31	0
24	0	32	2.6 (0.2)

P002 (TO CYLINDER HEAD)

1	L
2	COM
3	R
4	L'
5	COM
6	R'
7	GND
8	GND
9	GND
10	GND

R SHOWN ON THIS DRAWING FOR ORDERING.
S SHOWN IN THE PARTS LIST, AND MAY BE
DED SINCE THIS DRAWING WAS PREPARED.

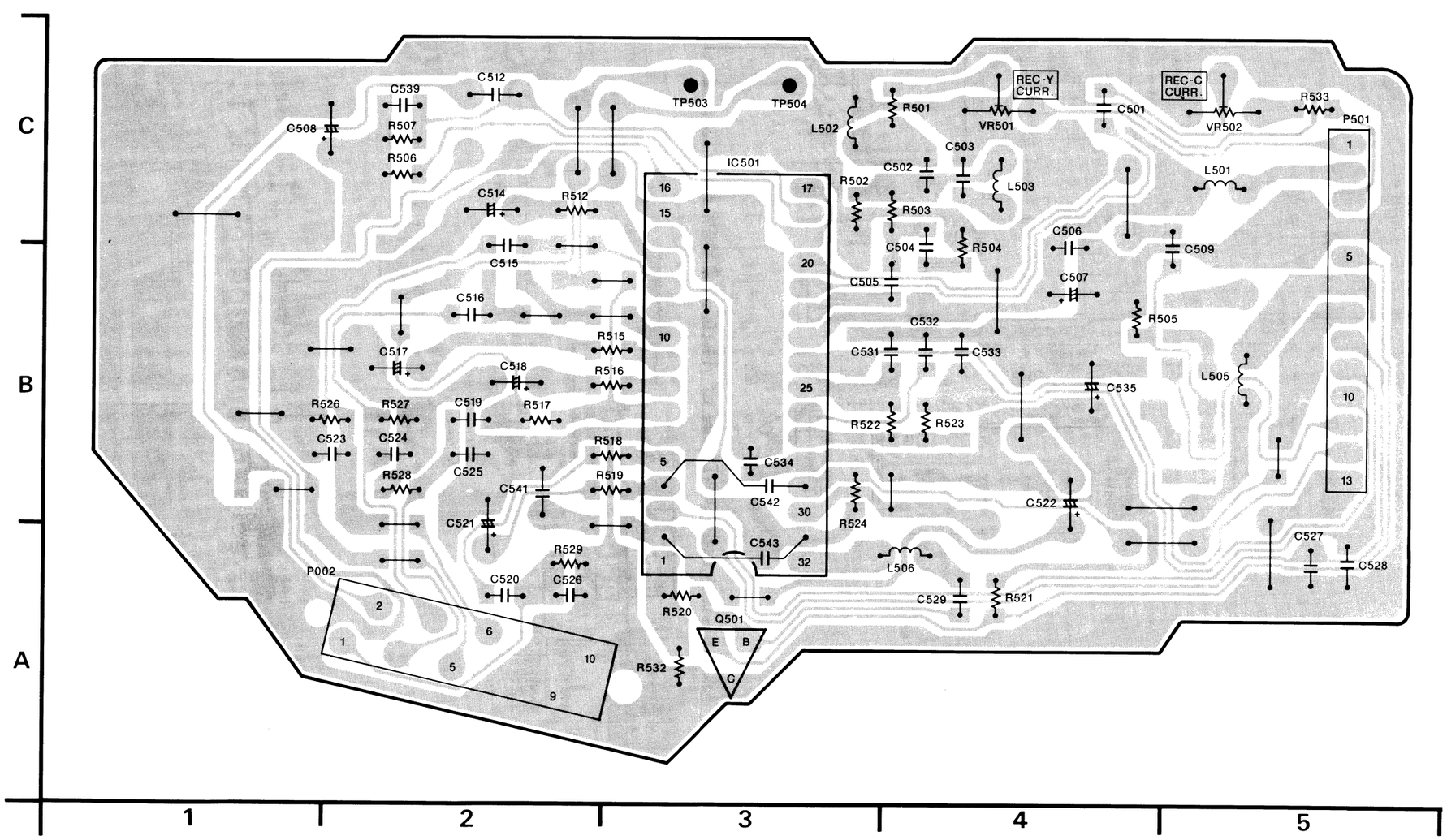

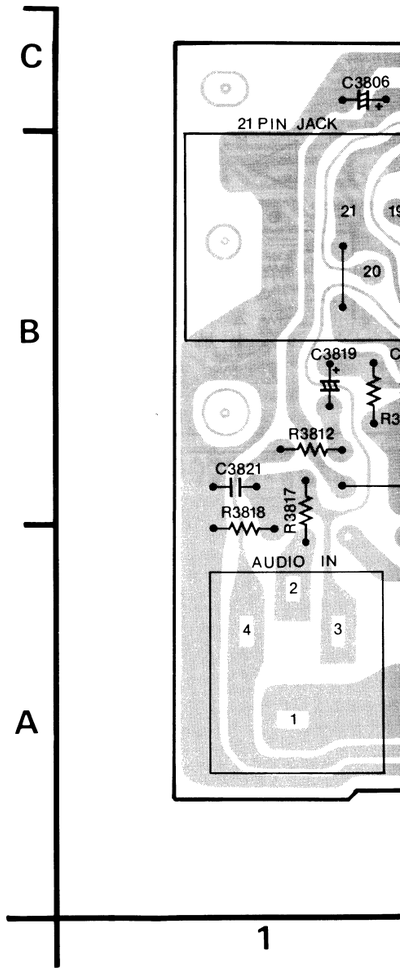

3-20. INPUT/OUTPUT PACK C.B.A. (VEP03494B: NV-D48EG)

HEAD AMP C.B.A.	
Transistor	
Q501	A-3
Integrated Circuit	
IC501	C-3
Test Point	
TP503 TP504	C-3 C-3
Adjustment	
VR501 VR502	C-4 C-5
Connector	
P002 P501	A-2 C-5

ADDRESS INFORMATION

INPUT/OUTPUT C.B.A.	
Transistor	
Q3801 Q3802 Q3803	C-2 A-2 A-3
Integrated Circuit	
IC3801 IC3802	B-3 B-2

ADDRESS INFORMATION

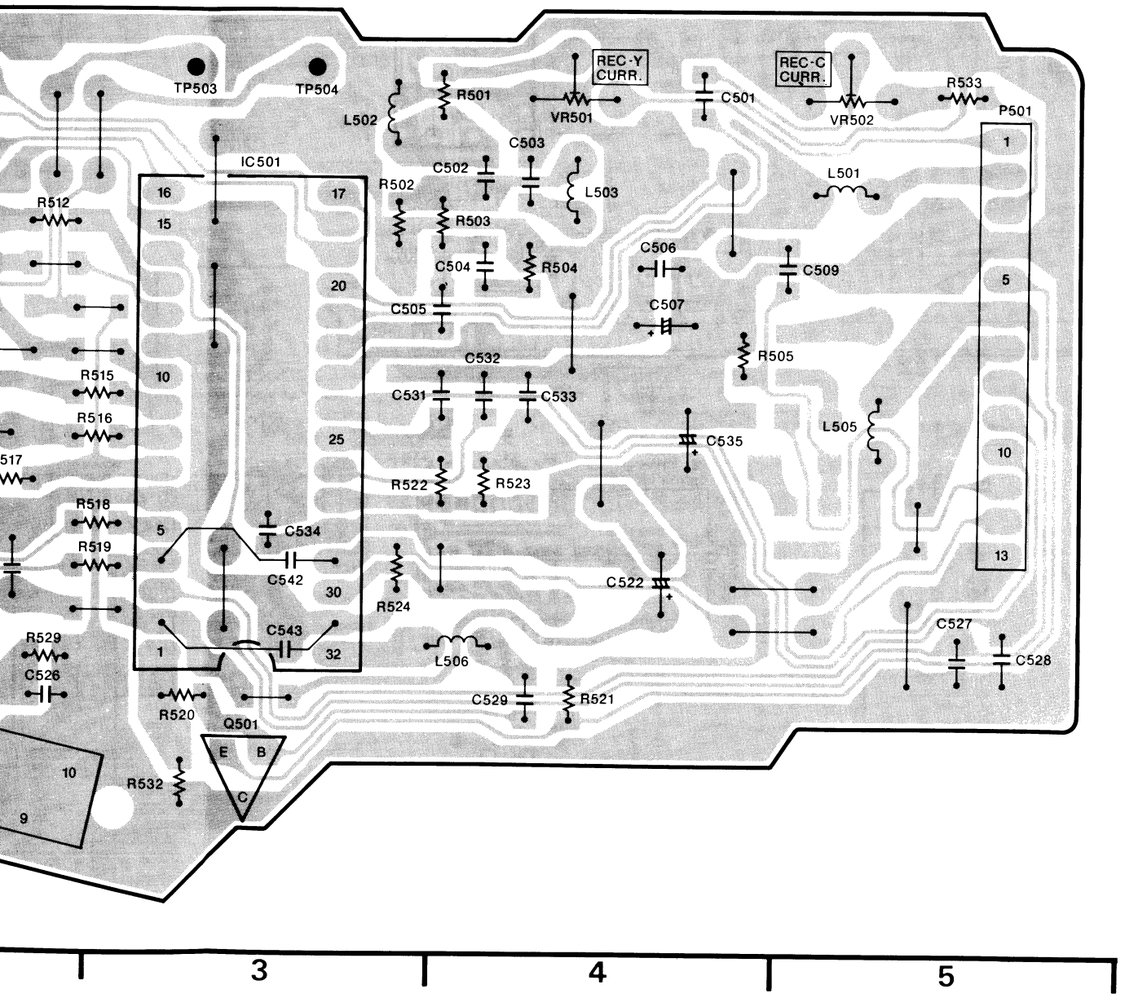

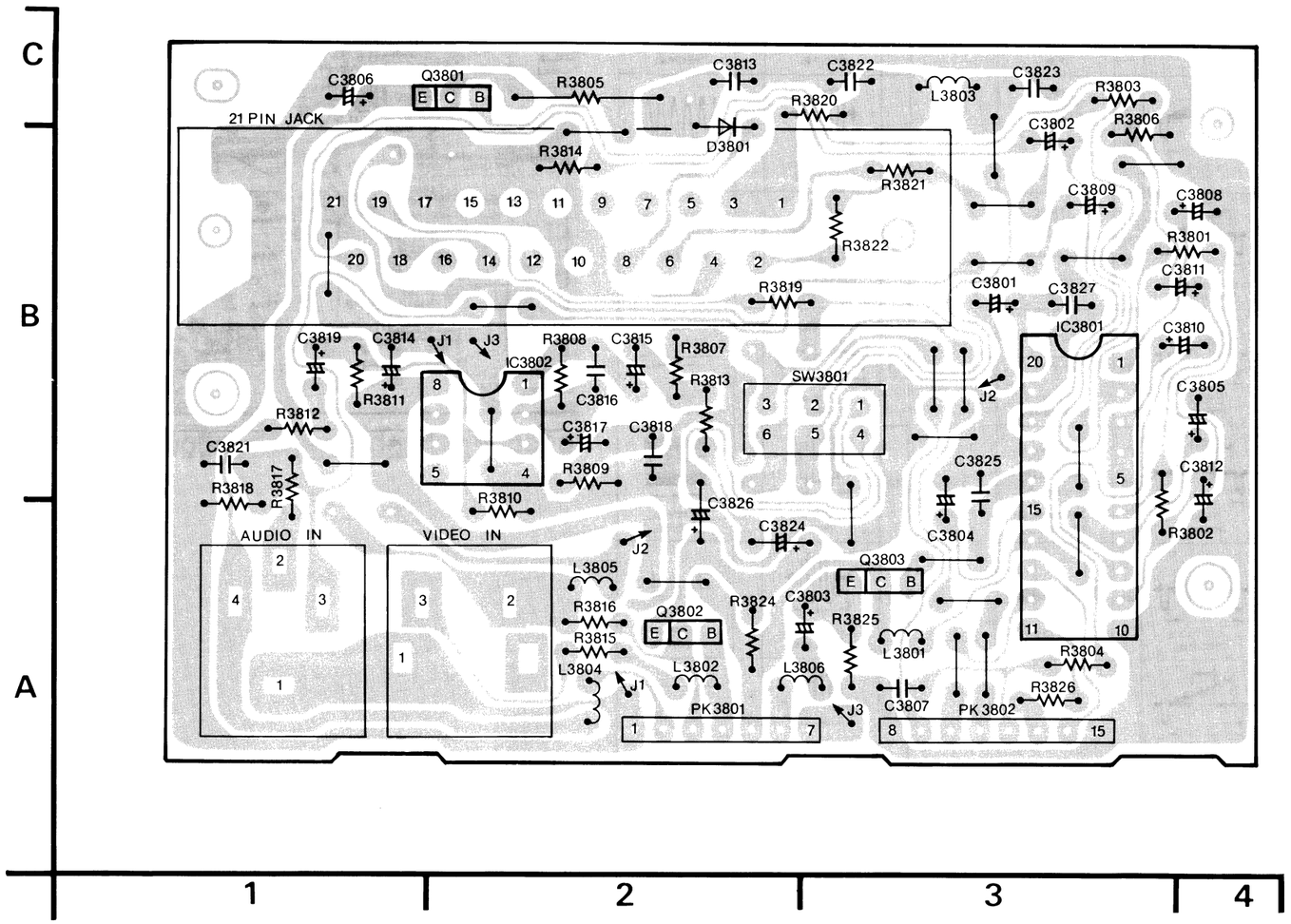

3-21. INPUT/OUTPUT PACK SCHEMATIC DIAGRAM (NV-D48EG)

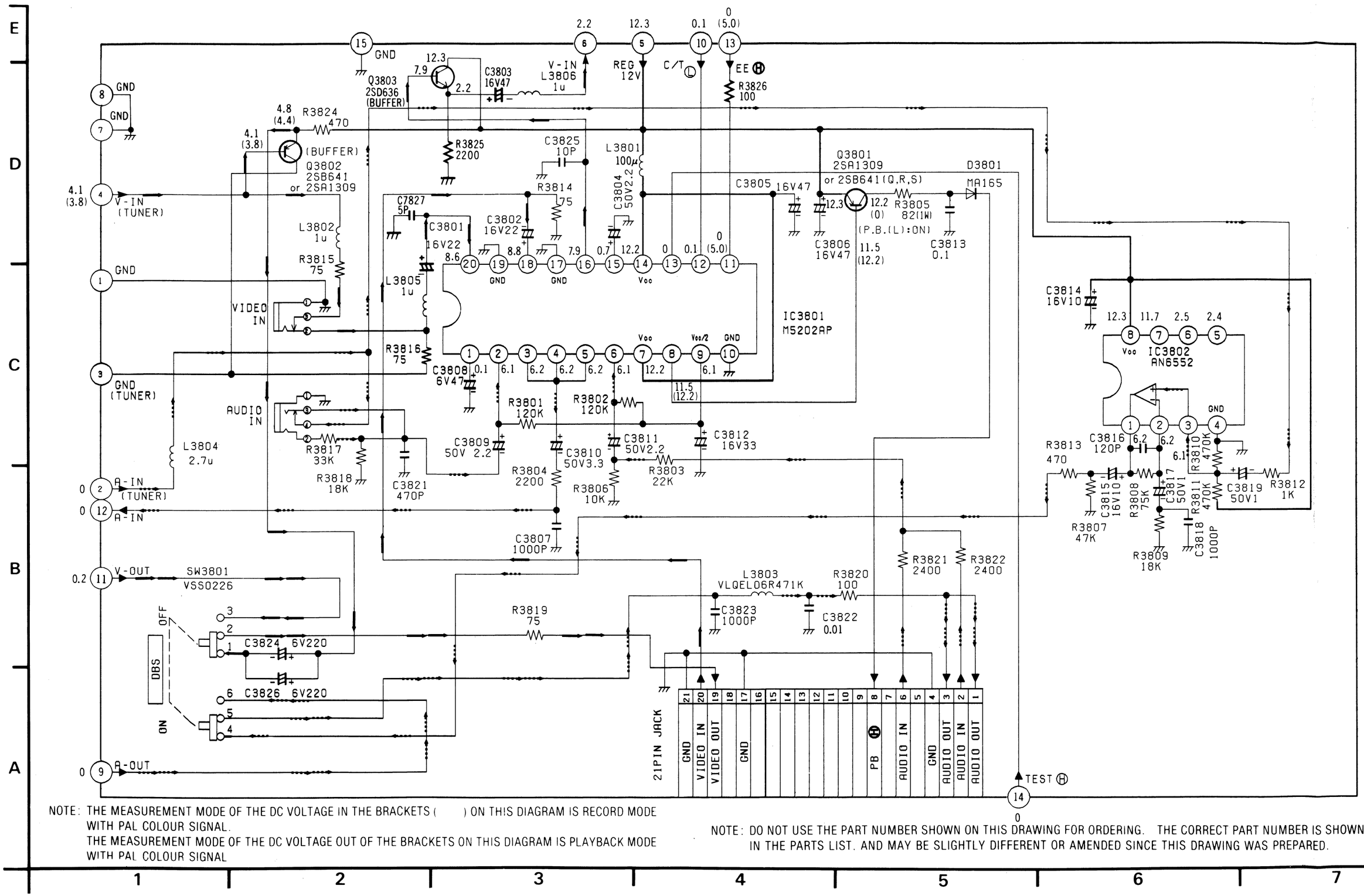

NOTE: THE MEASUREMENT MODE OF THE DC VOLTAGE IN THE BRACKETS ( ) ON THIS DIAGRAM IS RECORD MODE WITH PAL COLOUR SIGNAL.
THE MEASUREMENT MODE OF THE DC VOLTAGE OUT OF THE BRACKETS ON THIS DIAGRAM IS PLAYBACK MODE WITH PAL COLOUR SIGNAL

NOTE: DO NOT USE THE PART NUMBER SHOWN ON THIS DRAWING FOR ORDERING. THE CORRECT PART NUMBER IS SHOWN IN THE PARTS LIST. AND MAY BE SLIGHTLY DIFFERENT OR AMENDED SINCE THIS DRAWING WAS PREPARED.

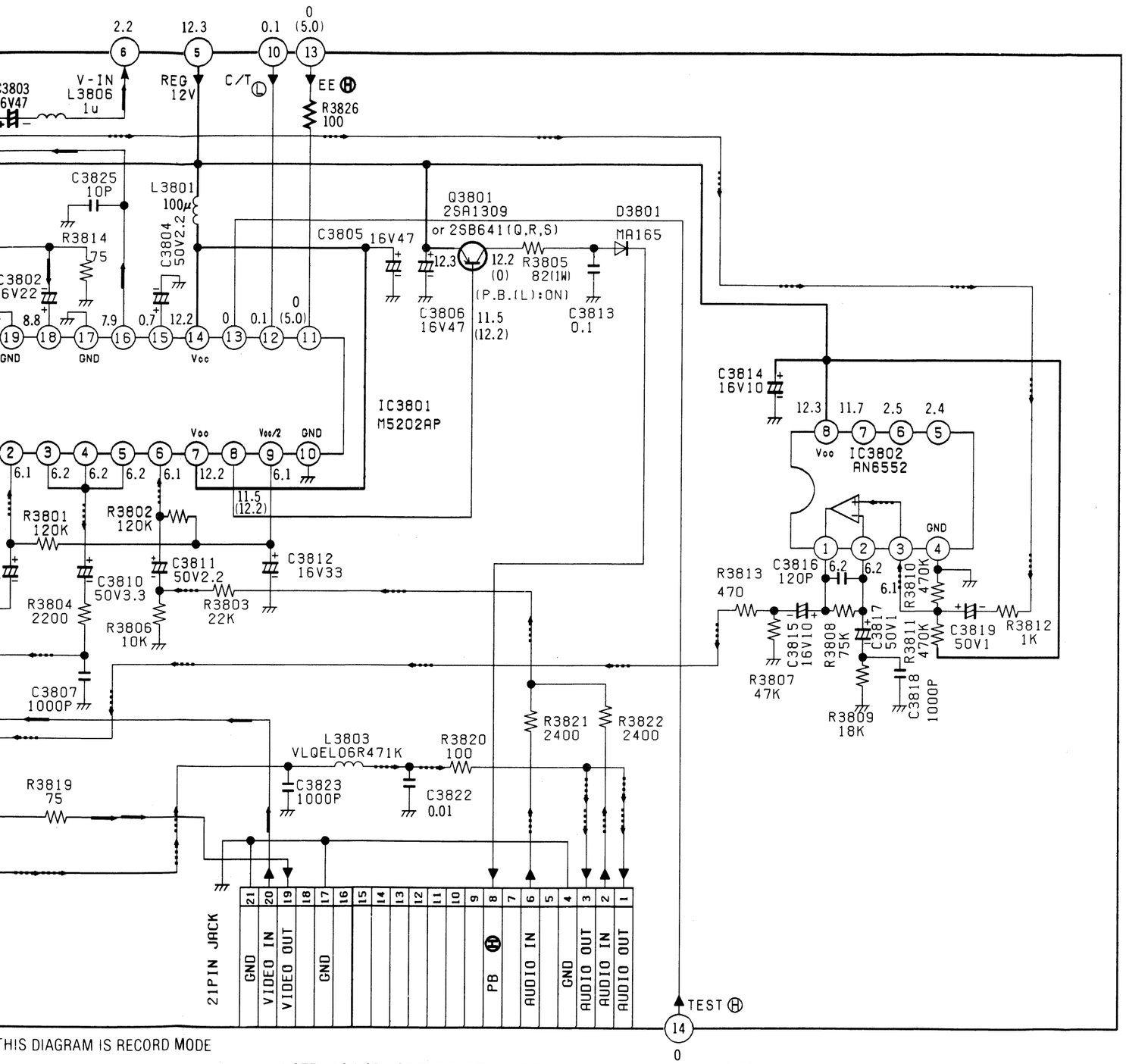

THIS DIAGRAM IS RECORD MODE

S DIAGRAM IS PLAYBACK MODE

NOTE: DO NOT USE THE PART NUMBER SHOWN ON THIS DRAWING FOR ORDERING. THE CORRECT PART NUMBER IS SHOWN IN THE PARTS LIST. AND MAY BE SLIGHTLY DIFFERENT OR AMENDED SINCE THIS DRAWING WAS PREPARED.

VIDEO MAIN SIGNAL PATH IN REC MODE

VIDEO MAIN SIGNAL PATH IN PLAYBACK MODE

AUDIO MAIN SIGNAL PATH IN REC MODE

AUDIO MAIN SIGNAL PATH IN PLAYBACK MODE

IC BLOCK

IC3801 (M5202AP)

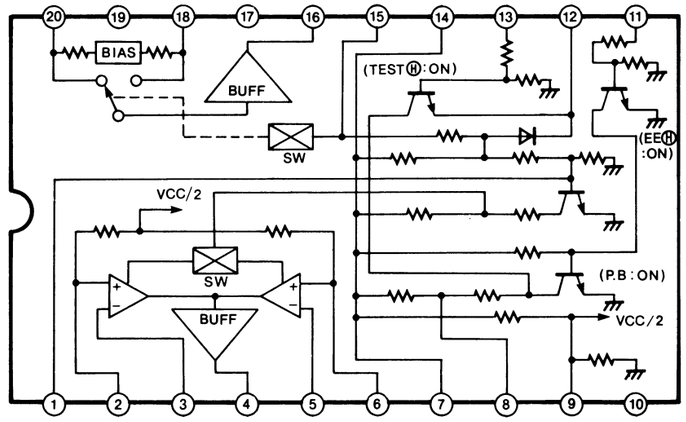

Next Page:
SUB DIGITAL Section

3-22. SUB DIGITAL SCHEMATIC DIAGRAM

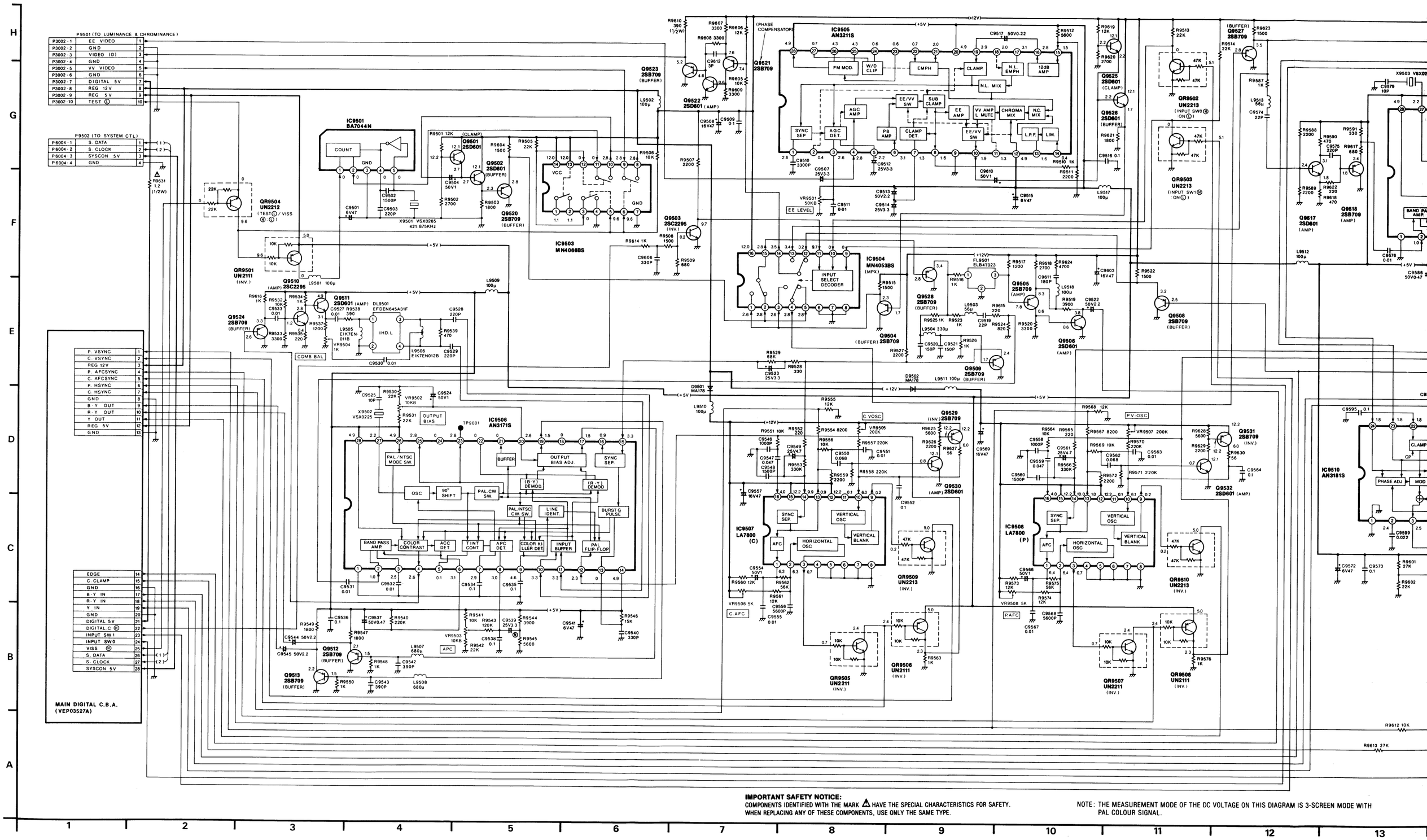

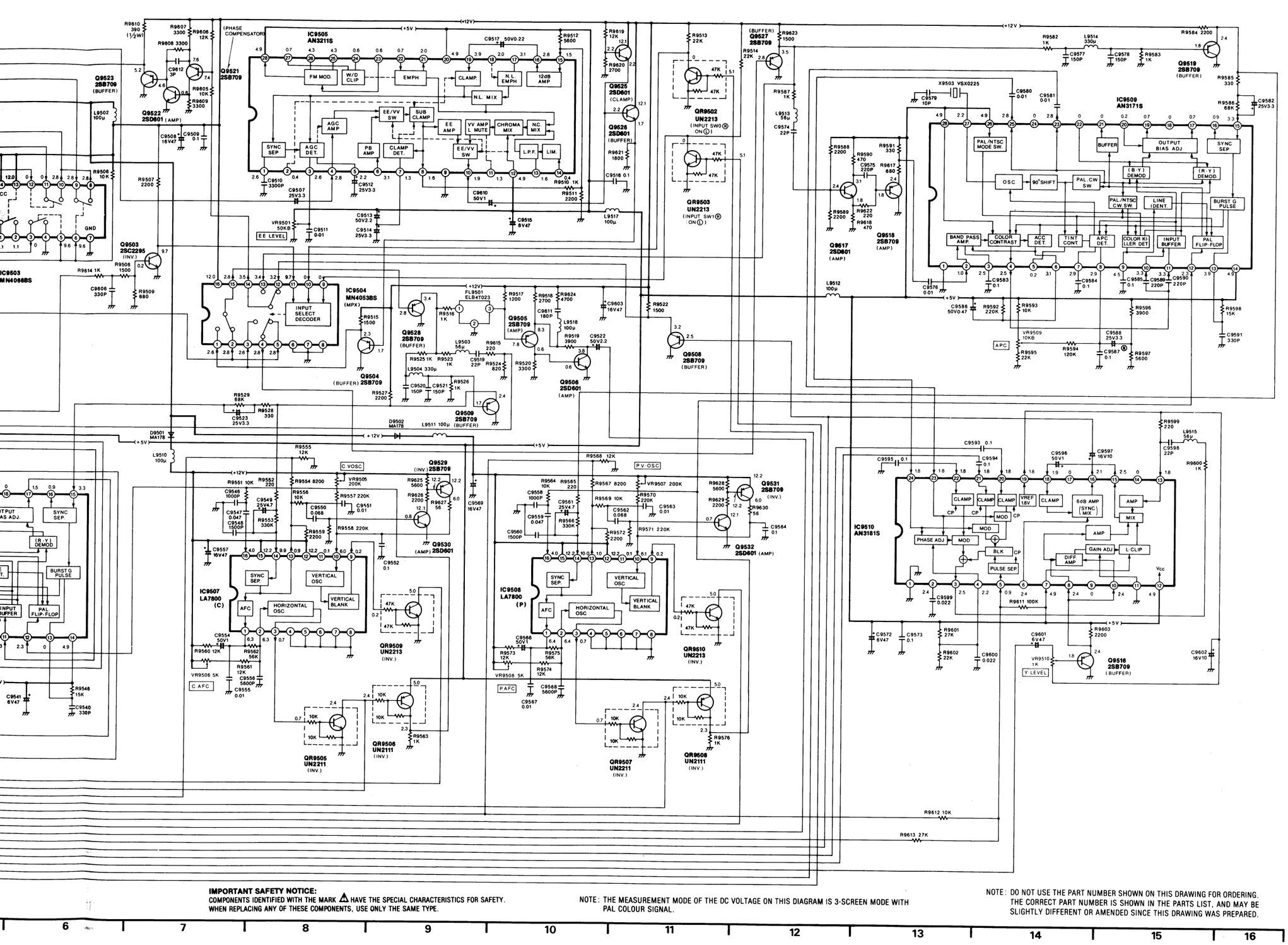

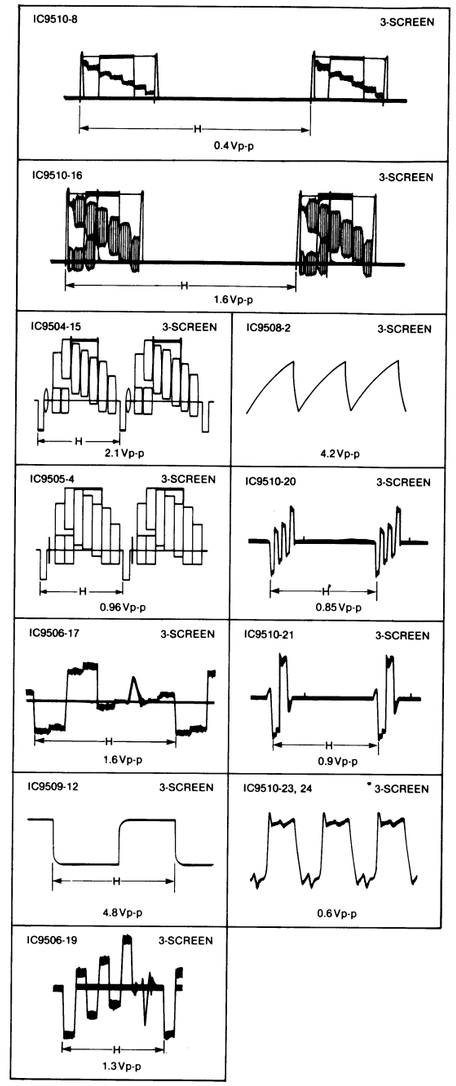

IMPORTANT SAFETY NOTICE:
COMPONENTS IDENTIFIED WITH THE MARK ⚠ HAVE THE SPECIAL CHARACTERISTICS FOR SAFETY. WHEN REPLACING ANY OF THESE COMPONENTS, USE ONLY THE SAME TYPE.

NOTE: THE MEASUREMENT MODE OF THE DC VOLTAGE ON THIS DIAGRAM IS 3-SCREEN MODE WITH PAL COLOUR SIGNAL.

NOTE: DO NOT USE THE PART NUMBER SHOWN ON THIS DRAWING FOR ORDERING. THE CORRECT PART NUMBER IS SHOWN IN THE PARTS LIST, AND MAY BE SLIGHTLY DIFFERENT OR AMENDED SINCE THIS DRAWING WAS PREPARED.

3-23. SUB DIGITAL C.B.A. (VEP03528A)

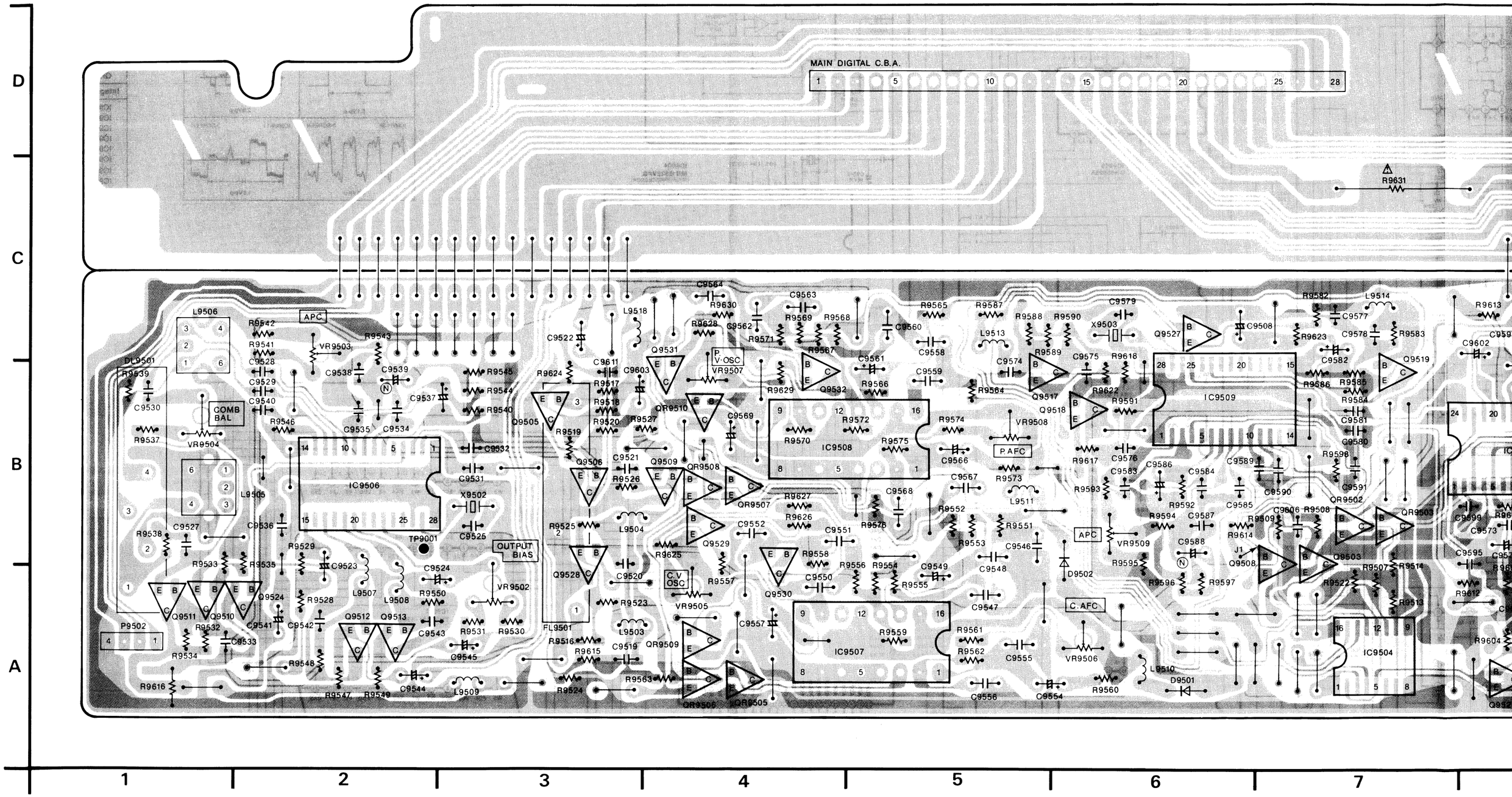

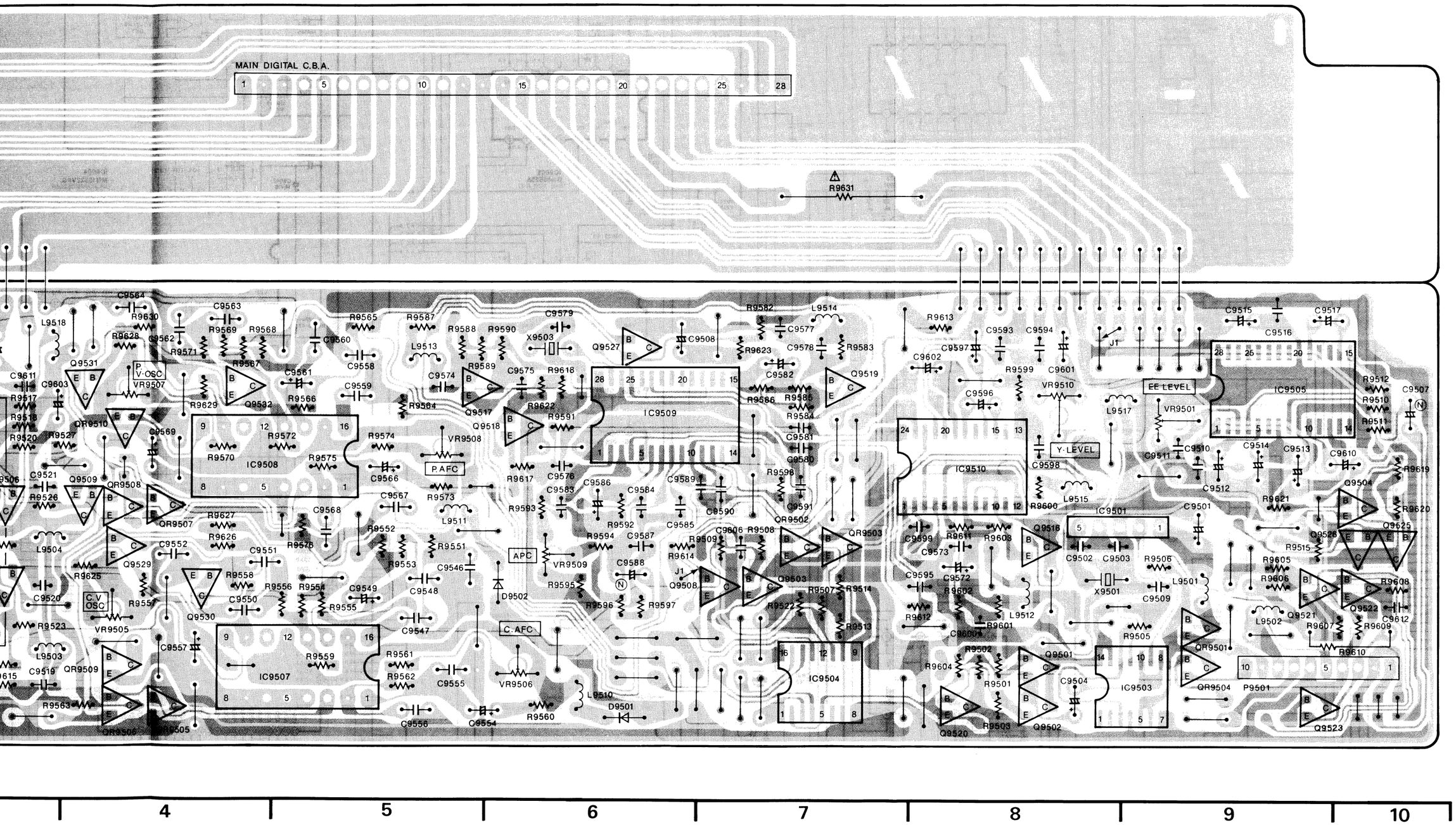

SUB DIGITAL C.B.A.	
Transistor	
Q9501	A-8
Q9502	A-8
Q9503	B-7
Q9504	B-10
Q9505	B-3
Q9506	B-3
Q9508	B-6
Q9509	B-4
Q9510	A-1
Q9511	A-1
Q9512	A-2
Q9513	A-2
Q9516	B-8
Q9517	B-5
Q9518	B-6
Q9519	C-7
Q9520	A-8
Q9521	A-9
Q9522	A-10
Q9523	A-9
Q9524	A-2
Q9525	B-10
Q9526	B-9
Q9527	C-6
Q9528	A-3
Q9529	B-4
Q9530	A-4
Q9531	C-4
Q9532	B-4
Transistor & Resistor	
QR9501	A-9
QR9502	B-7
QR9503	B-7
QR9504	A-9
QR9505	A-4
QR9506	A-4
QR9507	B-4
QR9508	B-4
QR9509	A-4
QR9510	B-4
Integrated Circuit	
IC9501	B-8
IC9503	A-9
IC9504	A-7
IC9505	B-9
IC9506	B-2
IC9507	A-5
IC9508	B-4
IC9509	B-6
IC9510	B-8
Test Point	
TP9001	B-2
Adjustment	
VR9501	B-9
VR9502	A-3
VR9503	C-2
VR9504	B-1
VR9505	A-4
VR9506	A-6
VR9507	B-4
VR9508	B-5
VR9509	B-6
VR9510	B-8
Connector	
P9501	A-9
P9502	A-1

ADDRESS INFORMATION

Next Page:
MAIN DIGITAL Section

3-24. MAIN DIGITAL SCHEMATIC DIAGRAM

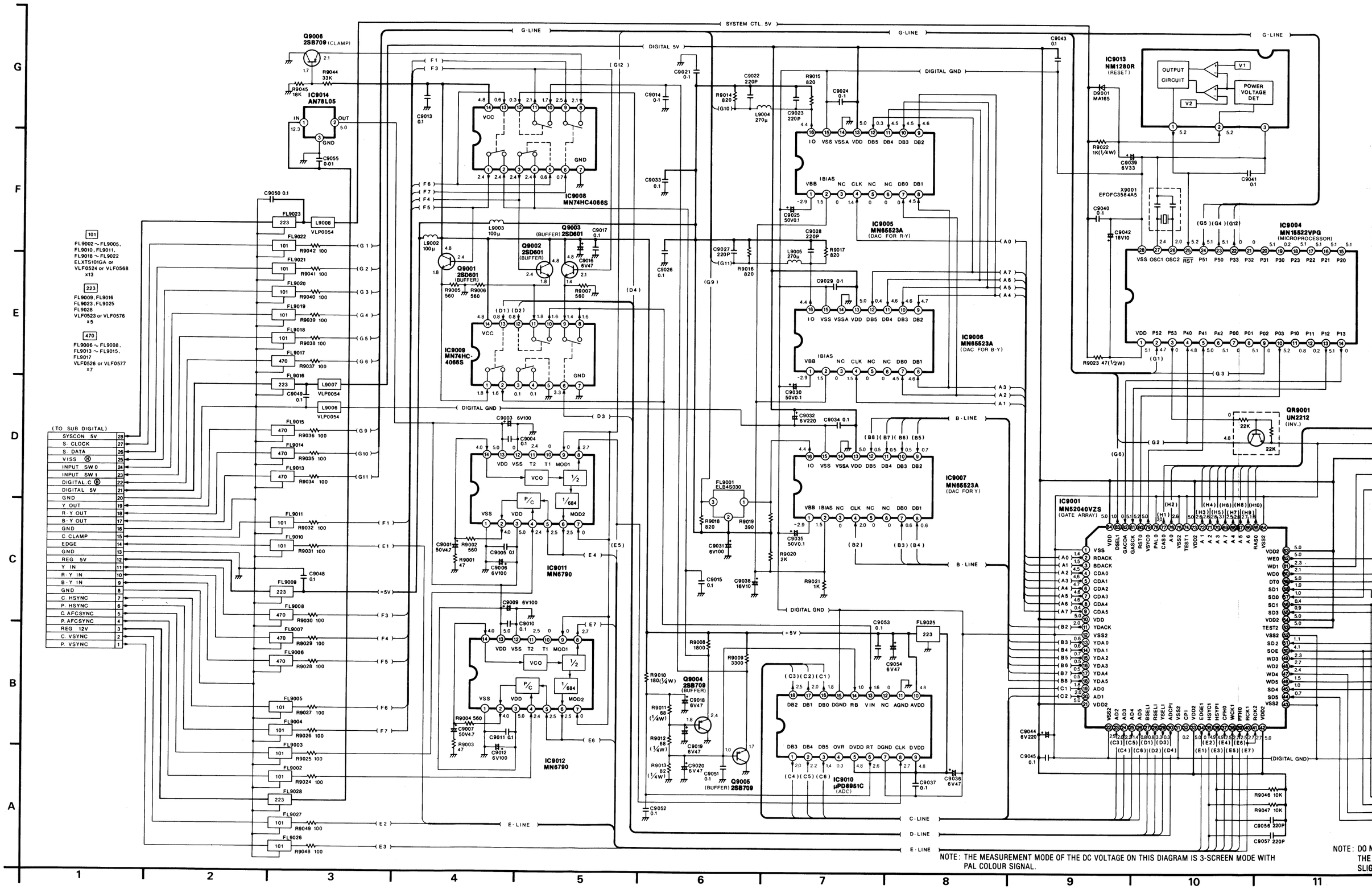

NOTE: THE MEASUREMENT MODE OF THE DC VOLTAGE ON THIS DIAGRAM IS 3-SCREEN MODE WITH PAL COLOUR SIGNAL.

NOTE: DO N
THE
SLIG

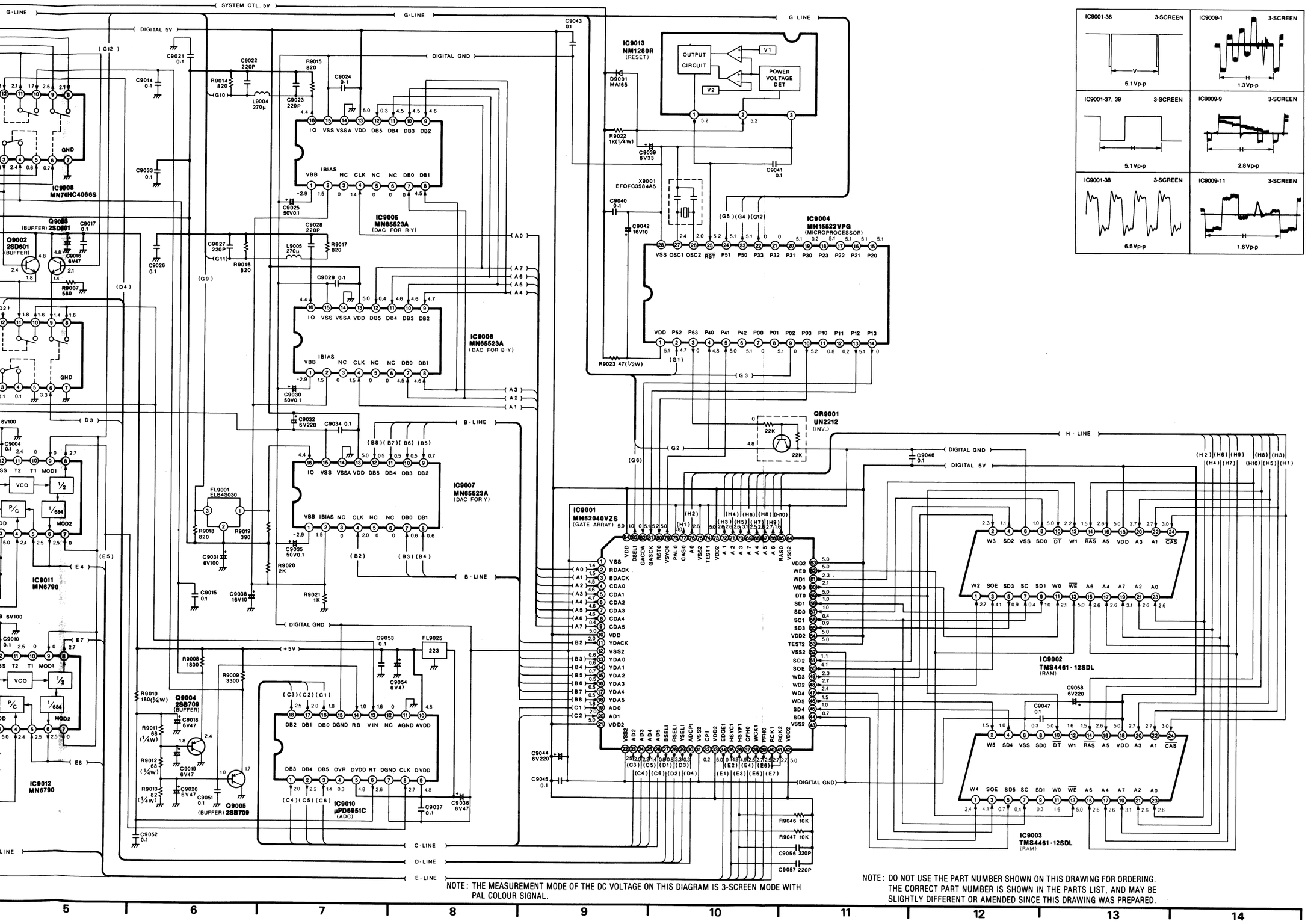

NOTE: THE MEASUREMENT MODE OF THE DC VOLTAGE ON THIS DIAGRAM IS 3-SCREEN MODE WITH PAL COLOUR SIGNAL.

NOTE: DO NOT USE THE PART NUMBER SHOWN ON THIS DRAWING FOR ORDERING. THE CORRECT PART NUMBER IS SHOWN IN THE PARTS LIST, AND MAY BE SLIGHTLY DIFFERENT OR AMENDED SINCE THIS DRAWING WAS PREPARED.

MAIN DIGITAL C.B.A.	
Transistor	
Q9001	B-7
Q9002	B-6
Q9003	B-6
Q9004	C-9
Q9005	C-9
Q9006	A-7
Transistor & Resistor	
QR9001	A-2
Integrated Circuit	
IC9001	C-3
IC9002	B-2
IC9003	B-1
IC9004	A-2
IC9005	B-4
IC9006	C-4
IC9007	C-6
IC9008	B-6
IC9009	B-7
IC9010	C-7
IC9011	A-8
IC9012	B-8
IC9013	B-4
IC9014	B-9

ADDRESS INFORMATION

3-25. MAIN DIGITAL C.B.A. (VEP03527A)

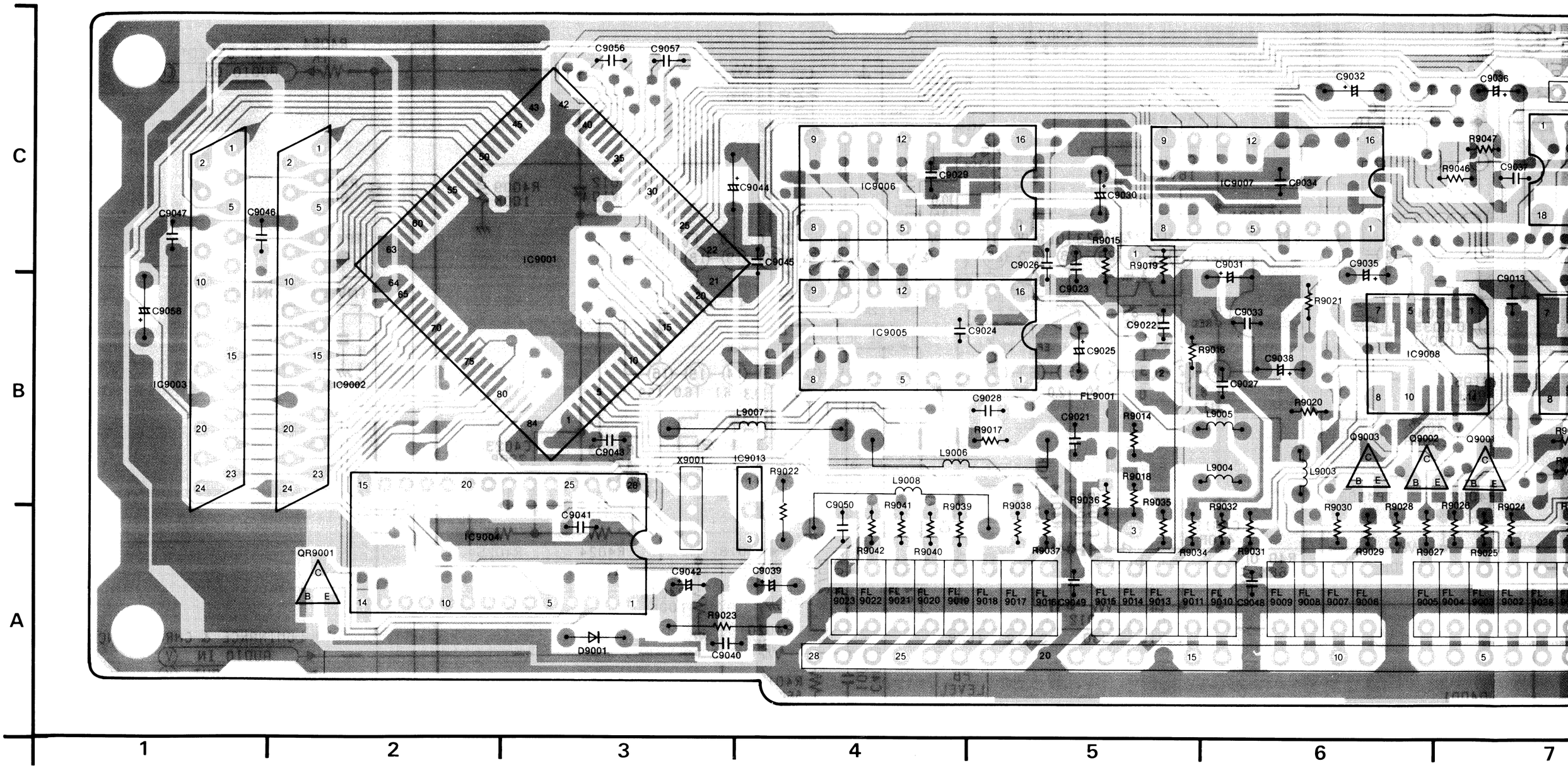

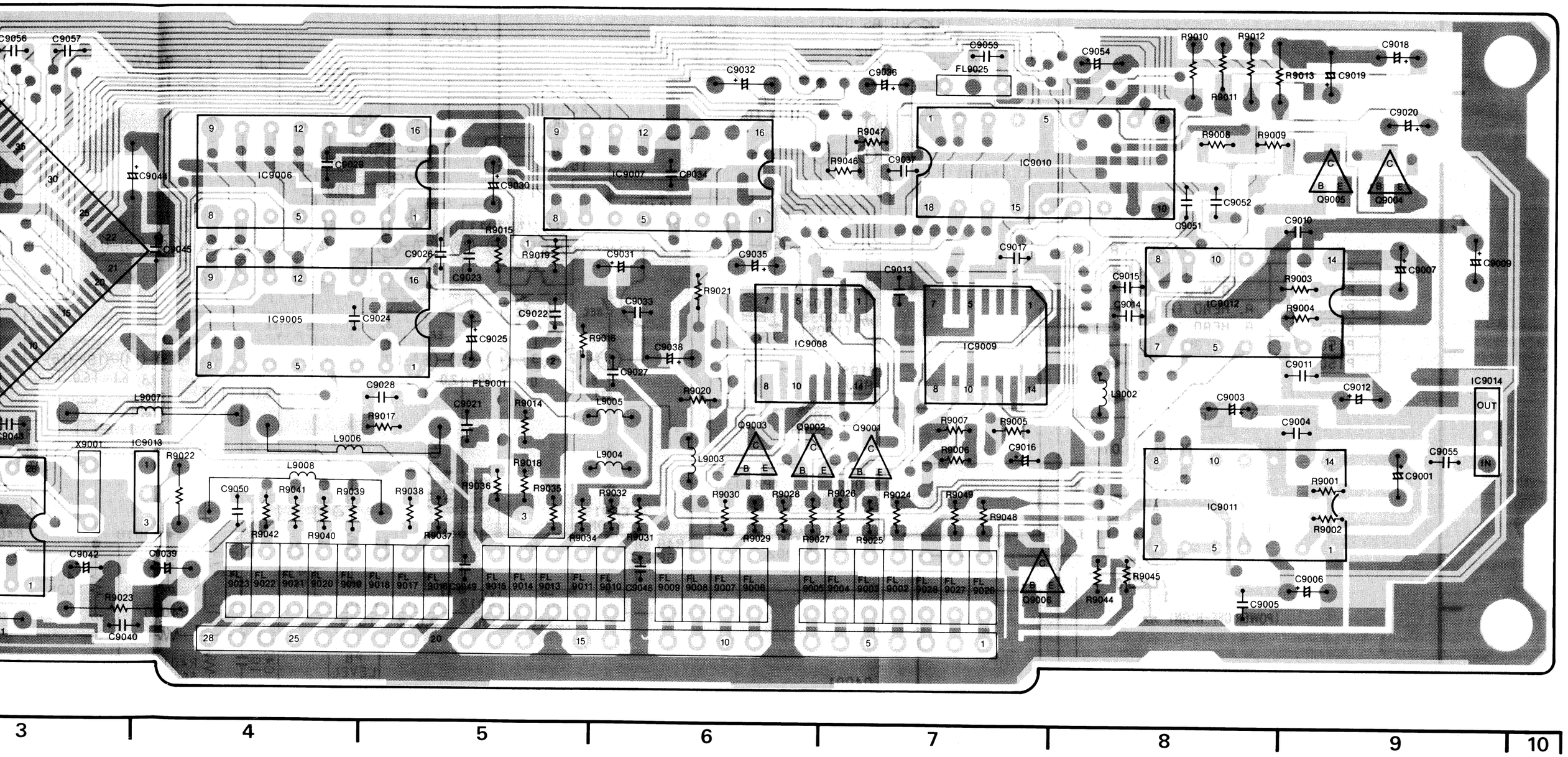

Next Page:
AUDIO Section

3-26. AUDIO SCHEMATIC DIAGRAM

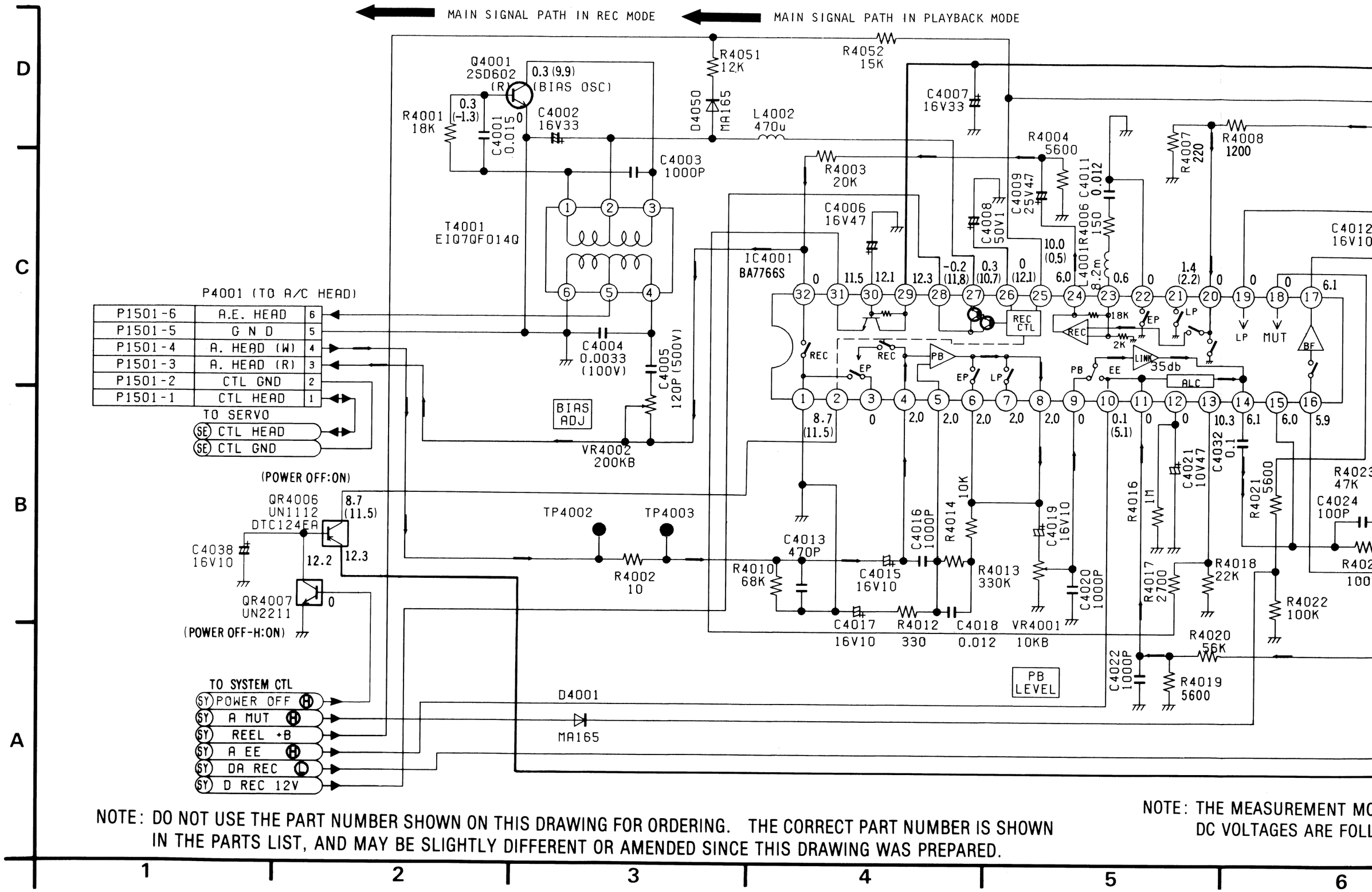

NOTE: DO NOT USE THE PART NUMBER SHOWN ON THIS DRAWING FOR ORDERING. THE CORRECT PART NUMBER IS SHOWN IN THE PARTS LIST, AND MAY BE SLIGHTLY DIFFERENT OR AMENDED SINCE THIS DRAWING WAS PREPARED.

NOTE: THE MEASUREMENT MO
DC VOLTAGES ARE FOLL

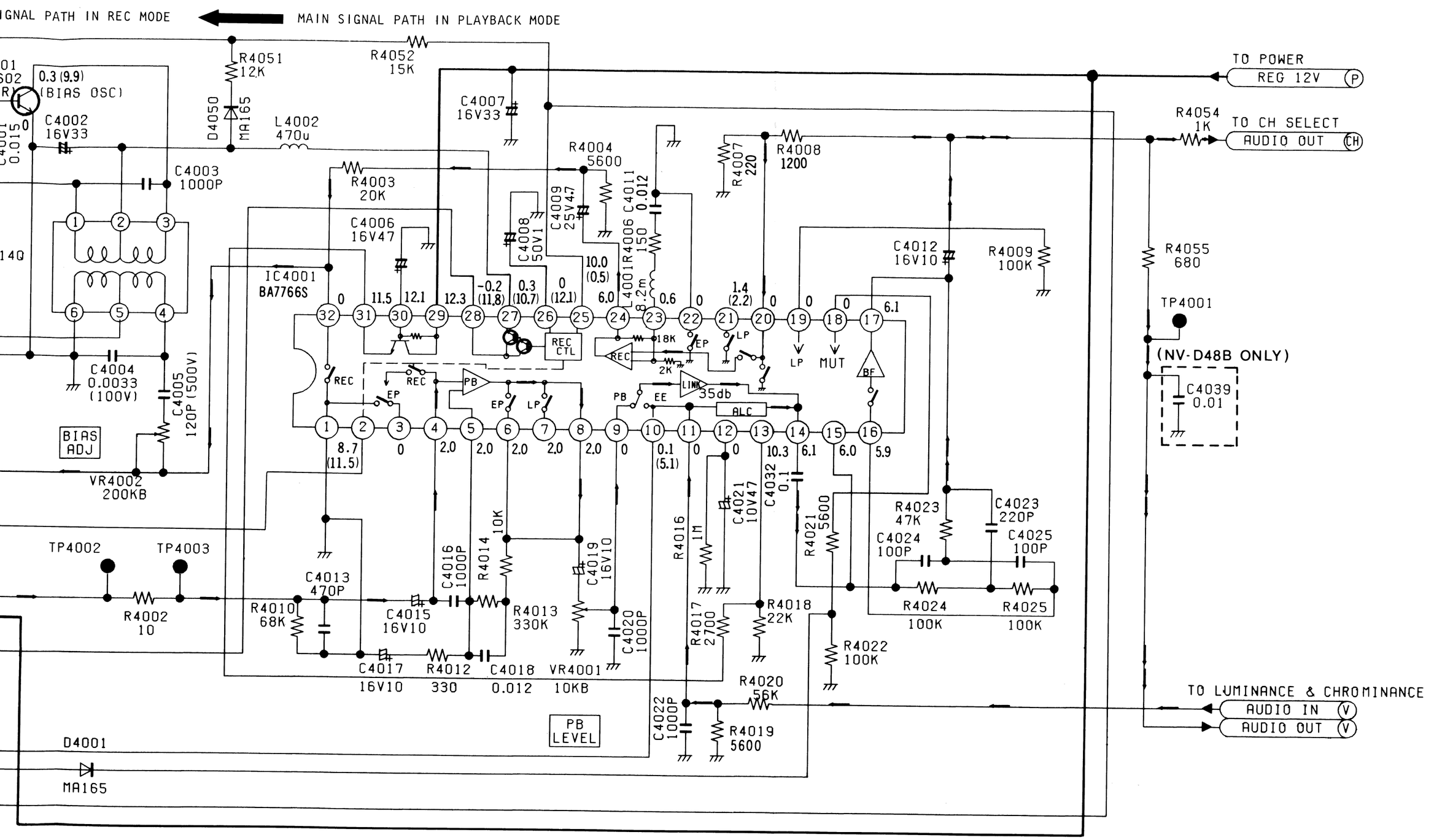

THIS DRAWING FOR ORDERING. THE CORRECT PART NUMBER IS SHOWN
DIFFERENT OR AMENDED SINCE THIS DRAWING WAS PREPARED.

NOTE: THE MEASUREMENT MODE OF THE
DC VOLTAGES ARE FOLLOWING CONDITION.

- LINE IN SIGNAL LEVEL... −10dB 1kHz
- MEASUREMENT MODE
  REC...BRACKETS ( )
  PLAY...WITHOUT BRACKETS

3 4 5 6 7 8

3-27. AUDIO Section In Main C.B.A. (VEP03493BE: NV-D48EG) (VEP03493BG: NV-D48B)

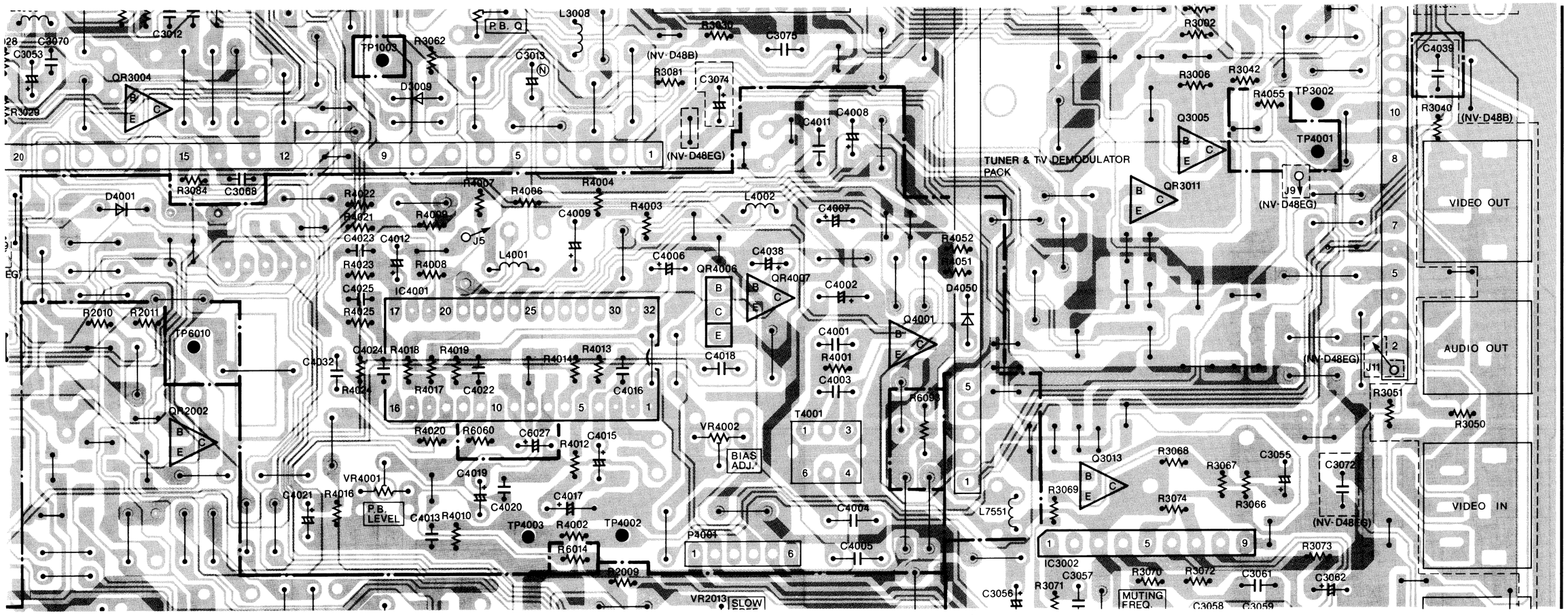

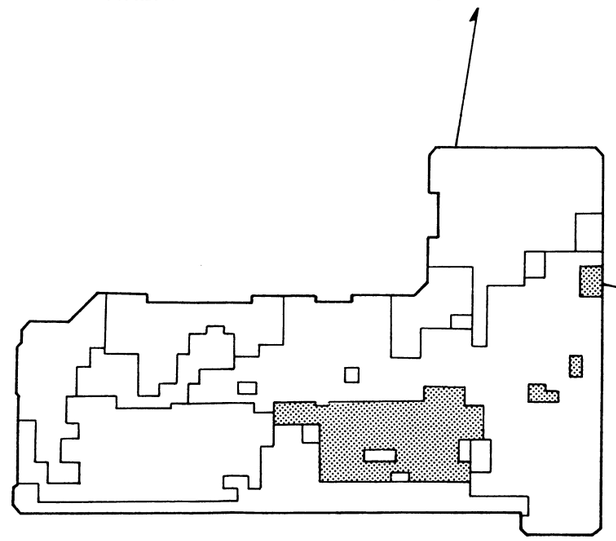

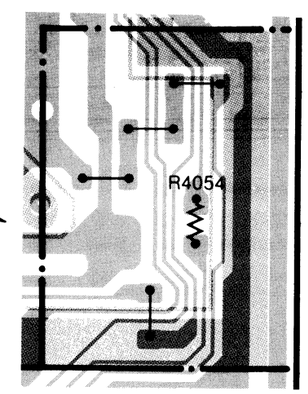

3-28. CH SELECT Section In Main C.B.A. (VEP03493BE: NV-D48EG) (VEP03493BG: NV-D48B)

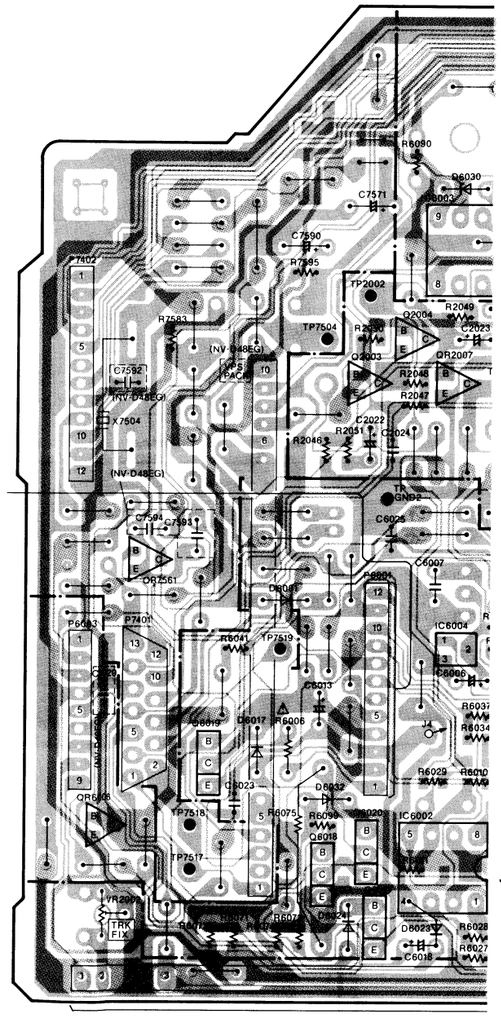

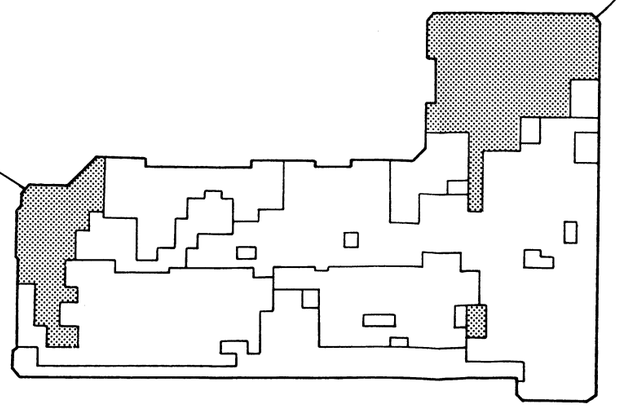

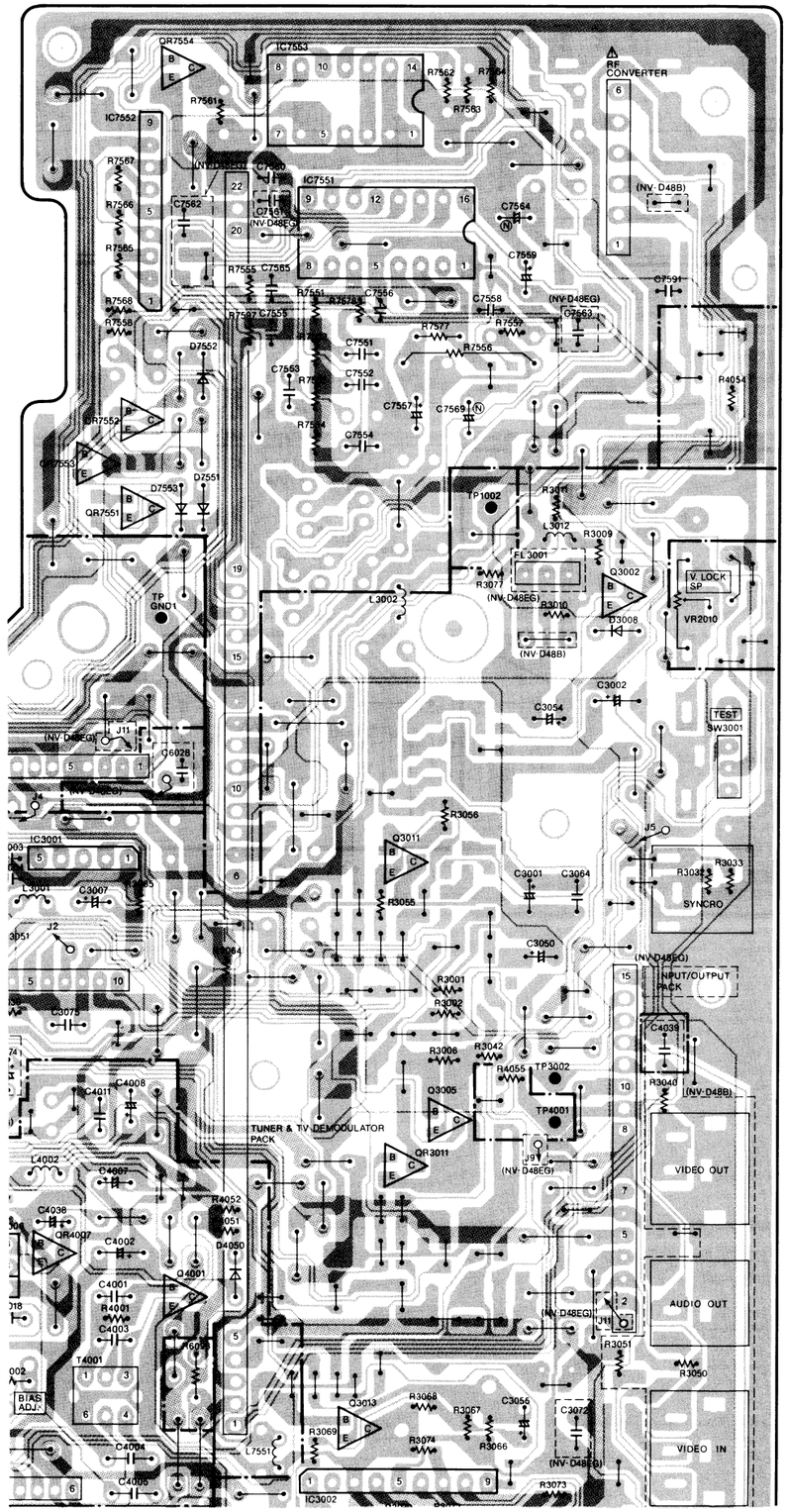

Back Page:
AUDIO Section

3-29. CH SELECT SCHEMATIC DIAGRAM

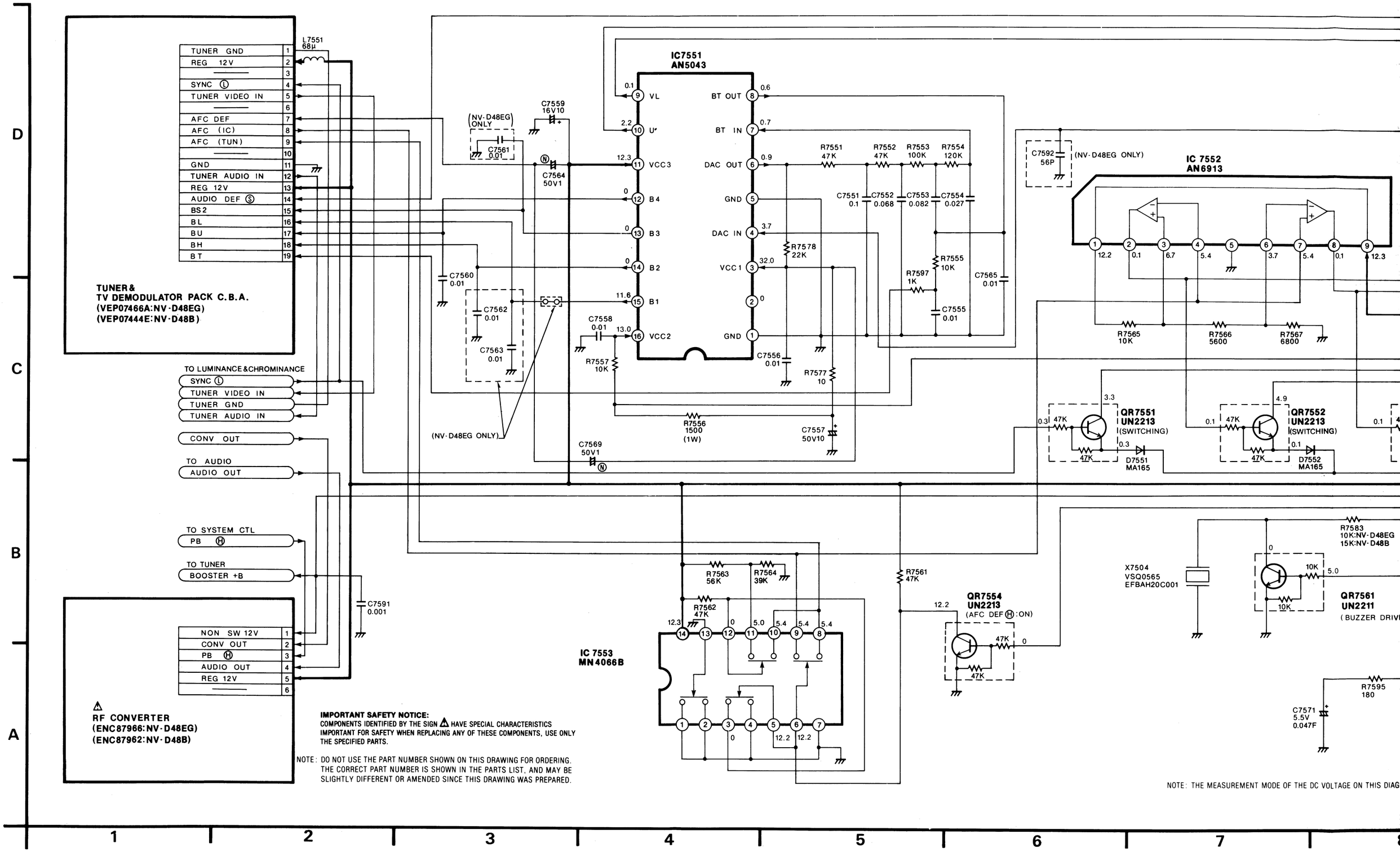

IMPORTANT SAFETY NOTICE:
COMPONENTS IDENTIFIED BY THE SIGN ⚠ HAVE SPECIAL CHARACTERISTICS IMPORTANT FOR SAFETY WHEN REPLACING ANY OF THESE COMPONENTS, USE ONLY THE SPECIFIED PARTS.

NOTE: DO NOT USE THE PART NUMBER SHOWN ON THIS DRAWING FOR ORDERING. THE CORRECT PART NUMBER IS SHOWN IN THE PARTS LIST, AND MAY BE SLIGHTLY DIFFERENT OR AMENDED SINCE THIS DRAWING WAS PREPARED.

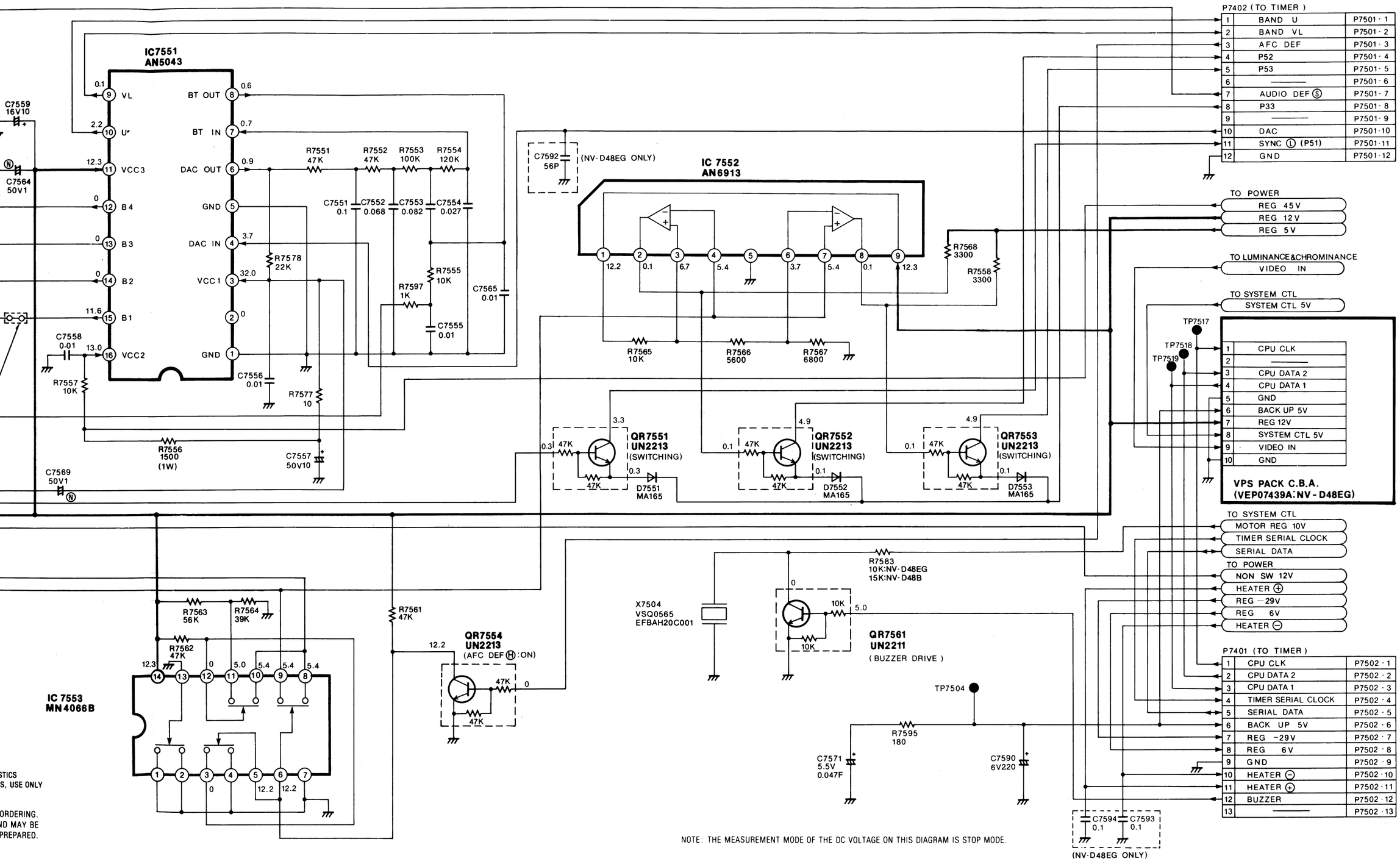

Next Page:
TUNER & TV DEMODULATOR PACK Section

3-30. TUNER & TV DEMODULATOR PACK SCHEMATIC DIAGRAM (NV-D48EG)

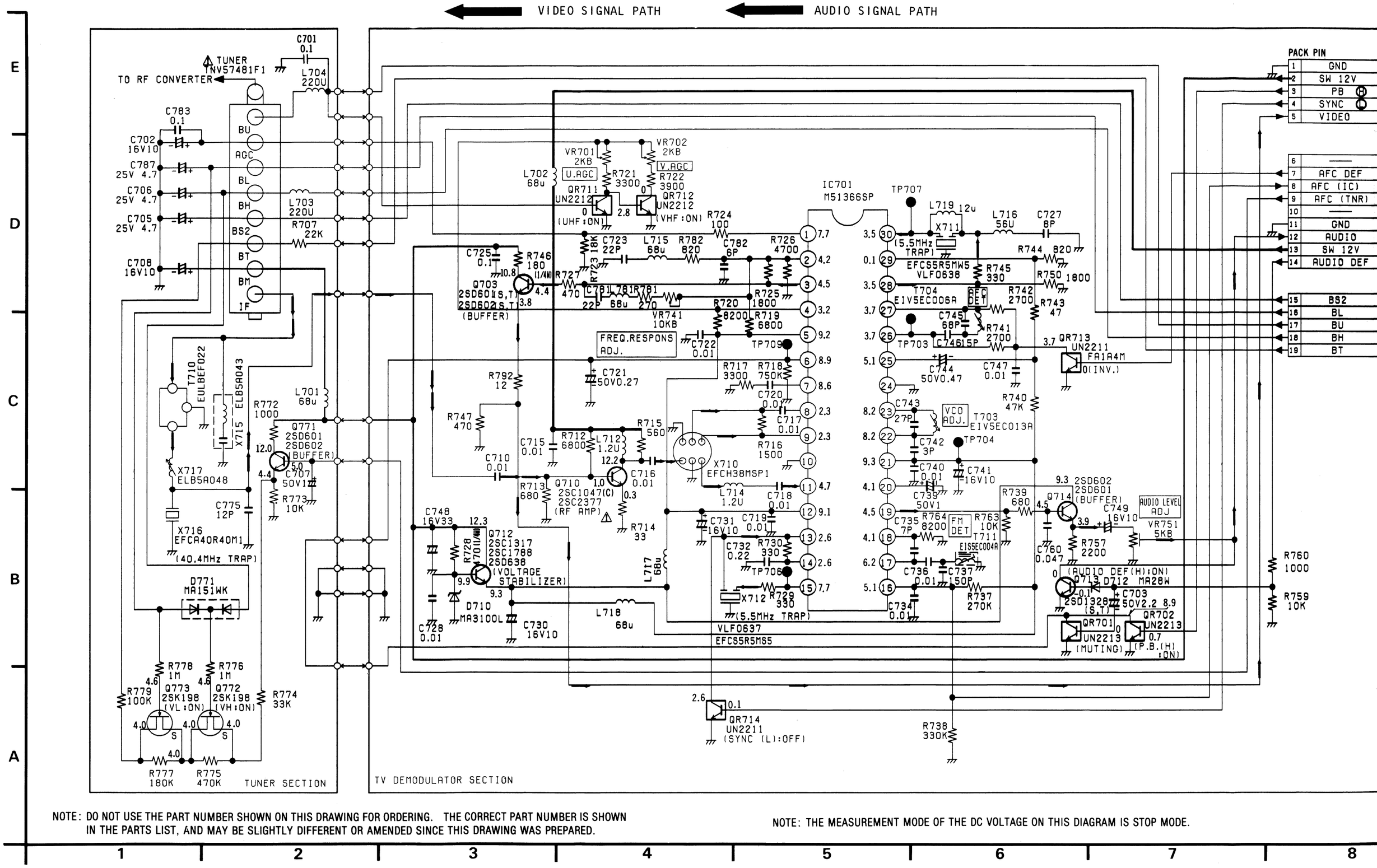

NOTE: DO NOT USE THE PART NUMBER SHOWN ON THIS DRAWING FOR ORDERING. THE CORRECT PART NUMBER IS SHOWN IN THE PARTS LIST, AND MAY BE SLIGHTLY DIFFERENT OR AMENDED SINCE THIS DRAWING WAS PREPARED.

NOTE: THE MEASUREMENT MODE OF THE DC VOLTAGE ON THIS DIAGRAM IS STOP MODE.

IAGRAM (NV-D48EG)

VIDEO SIGNAL PATH AUDIO SIGNAL PATH

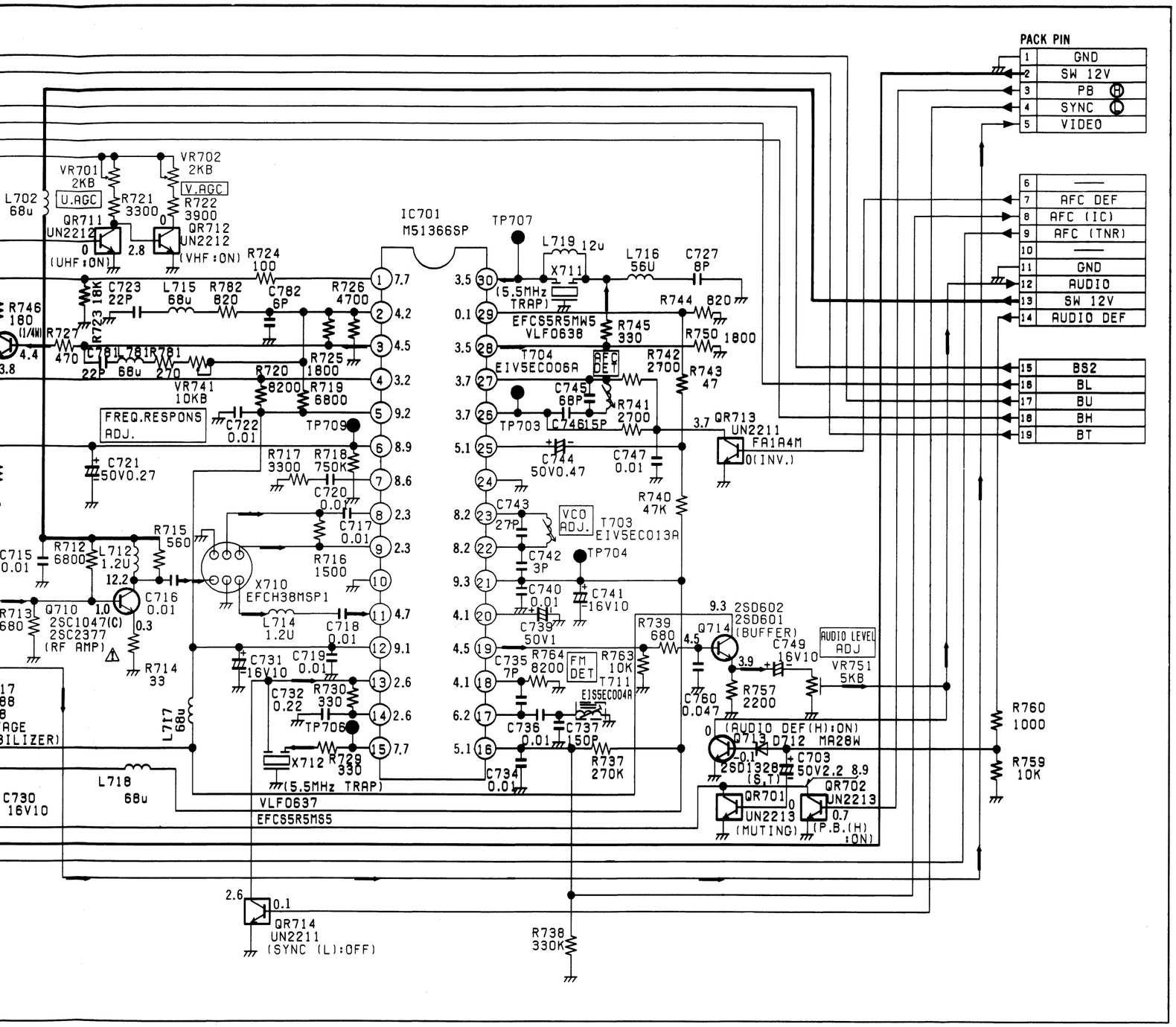

RT NUMBER IS SHOWN
WAS PREPARED.

NOTE: THE MEASUREMENT MODE OF THE DC VOLTAGE ON THIS DIAGRAM IS STOP MODE.

4 5 6 7 8

IC BLOCK
IC701 (M51366SP)

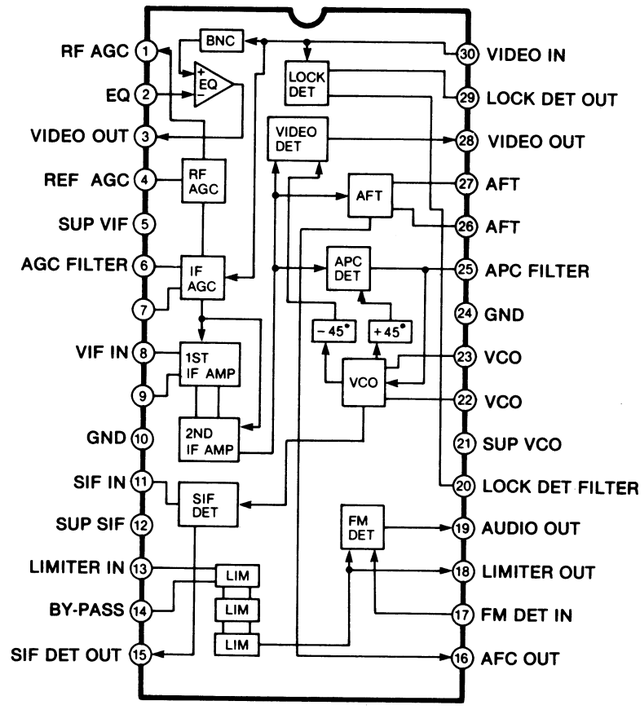

IMPORTANT SAFETY NOTICE:
COMPONENTS IDENTIFIED BY THE SIGN ⚠ HAVE SPECIAL CHARACTERISTICS IMPORTANT FOR SAFETY WHEN REPLACING ANY OF THESE COMPONENTS, USE ONLY THE SPECIFIED PARTS.

3-31. TUNER & TV DEMODULATOR PACK C.B.A. (VEP07466A: NV-D48EG)

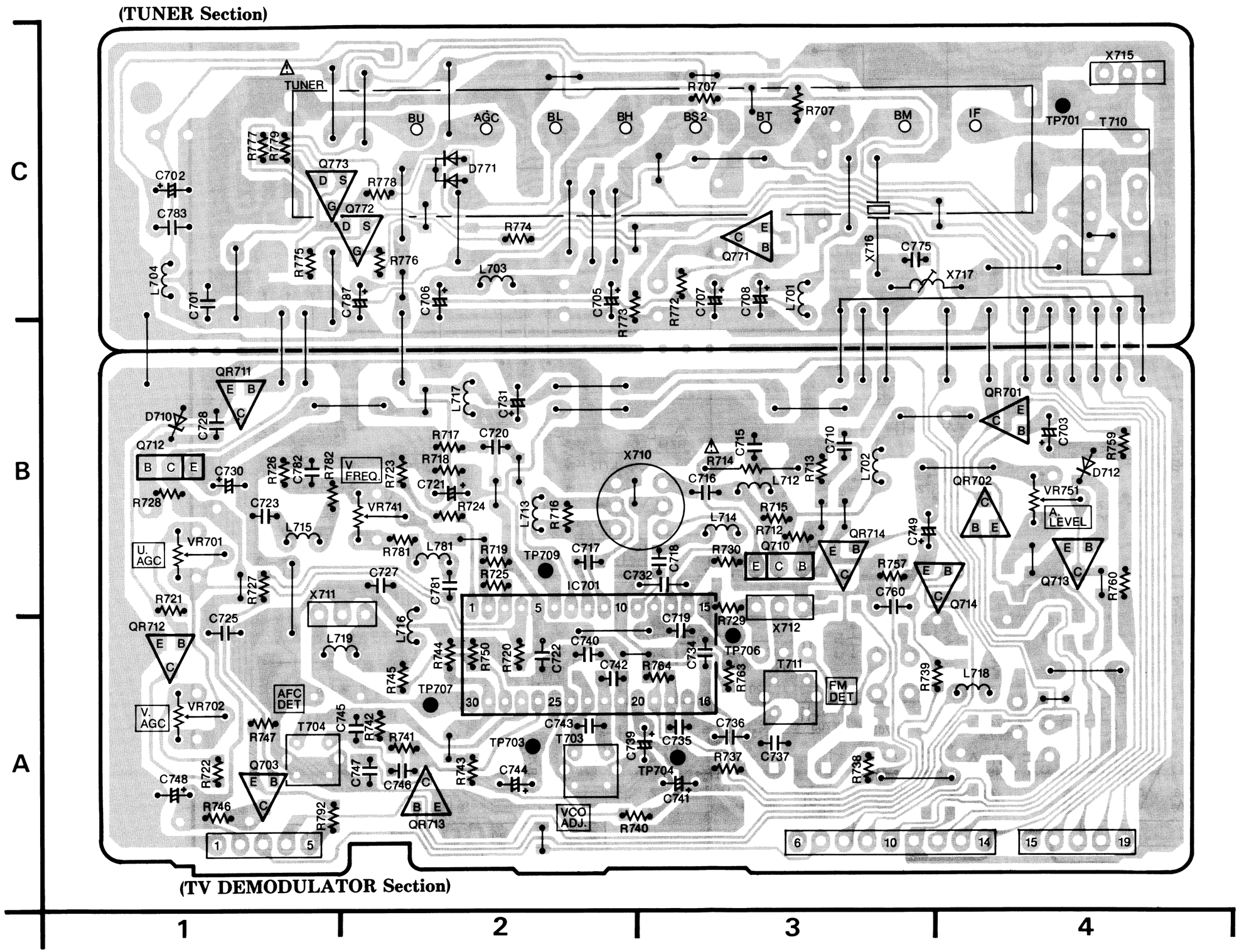

TUNER & TV DEMODULATOR PACK C.B.A. (NV-D48EG)	
Transistor	
Q703	A-1
Q710	B-3
Q712	B-1
Q713	B-4
Q714	B-4
Q771	C-3
Q772	C-2
Q773	C-1
Transistor & Resistor	
QR701	B-4
QR702	B-4
QR711	B-1
QR712	A-1
QR713	A-2
QR714	B-3
Integrated Circuit	
IC701	B-2
Test Point	
TP701	C-4
TP703	A-2
TP704	A-3
TP706	A-3
TP707	A-2
TP709	B-2
Adjustment	
T703	A-2
T704	A-1
T711	A-3
VR701	B-1
VR702	A-1
VR741	B-2
VR751	B-4

ADDRESS INFORMATION

3-32. TUNER & TV DEMODULATOR PACK C.B.A. (VEP07444E: NV-D48B)

(TUNER Section)

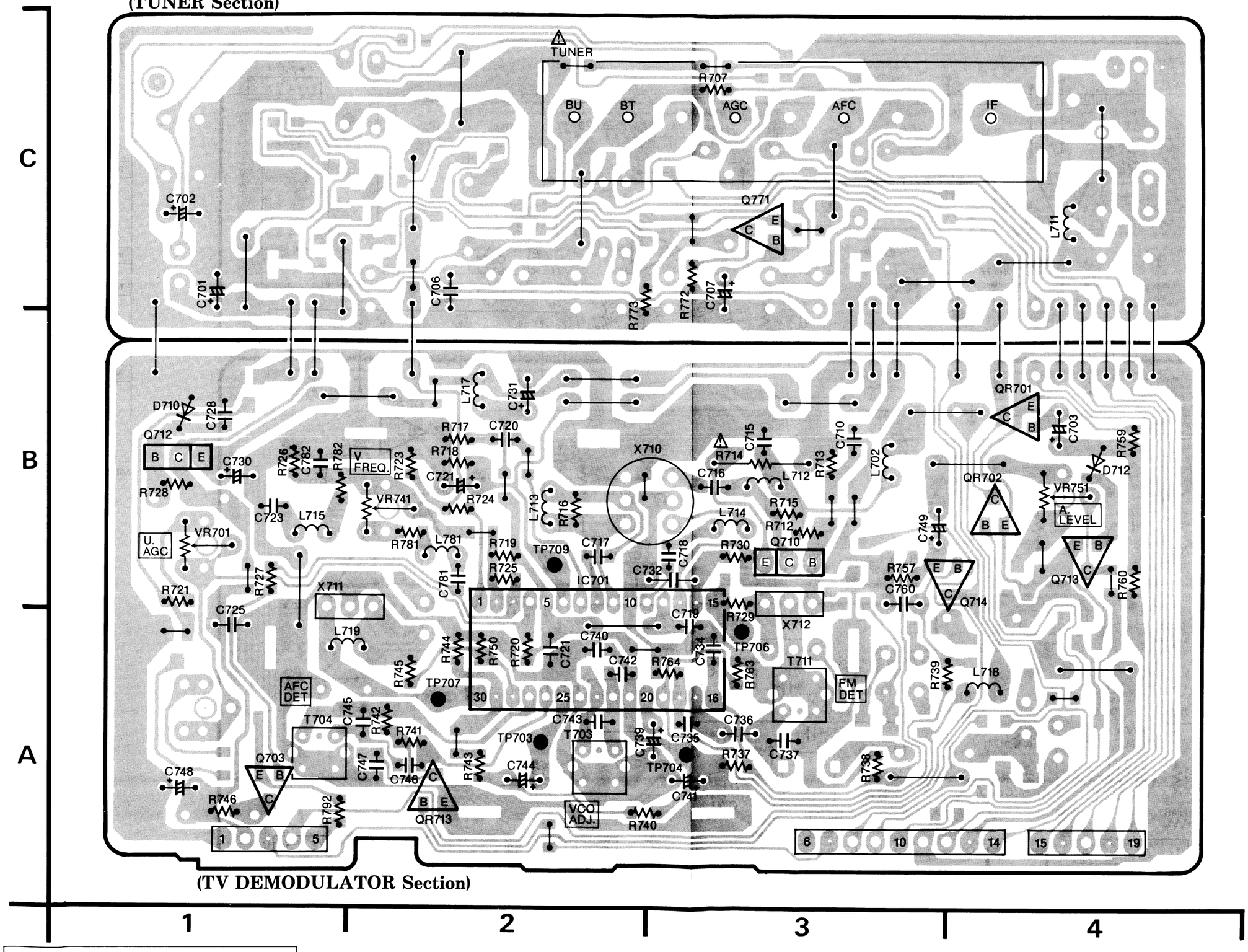

(TV DEMODULATOR Section)

TUNER & TV DEMODULATOR PACK C.B.A. (NV-D48B)	
Transistor	
Q703	A-1
Q710	B-3
Q712	B-1
Q713	B-4
Q714	B-4
Q771	C-3
Transistor & Resistor	
QR701	B-4
QR702	B-4
QR713	A-2
Integrated Circuit	
IC701	B-2
Test Point	
TP701	C-4
TP703	A-2
TP704	A-3
TP706	A-3
TP707	A-2
TP709	B-2
Adjustment	
T703	A-2
T704	A-1
T711	A-3
VR701	B-1
VR741	B-2
VR751	B-4

ADDRESS INFORMATION

Back Page:
TUNER & TV DEMODULATOR PACK Section

3-33. TUNER & TV DEMODULATOR PACK SCHEMATIC DIAGRAM (NV-D48B)

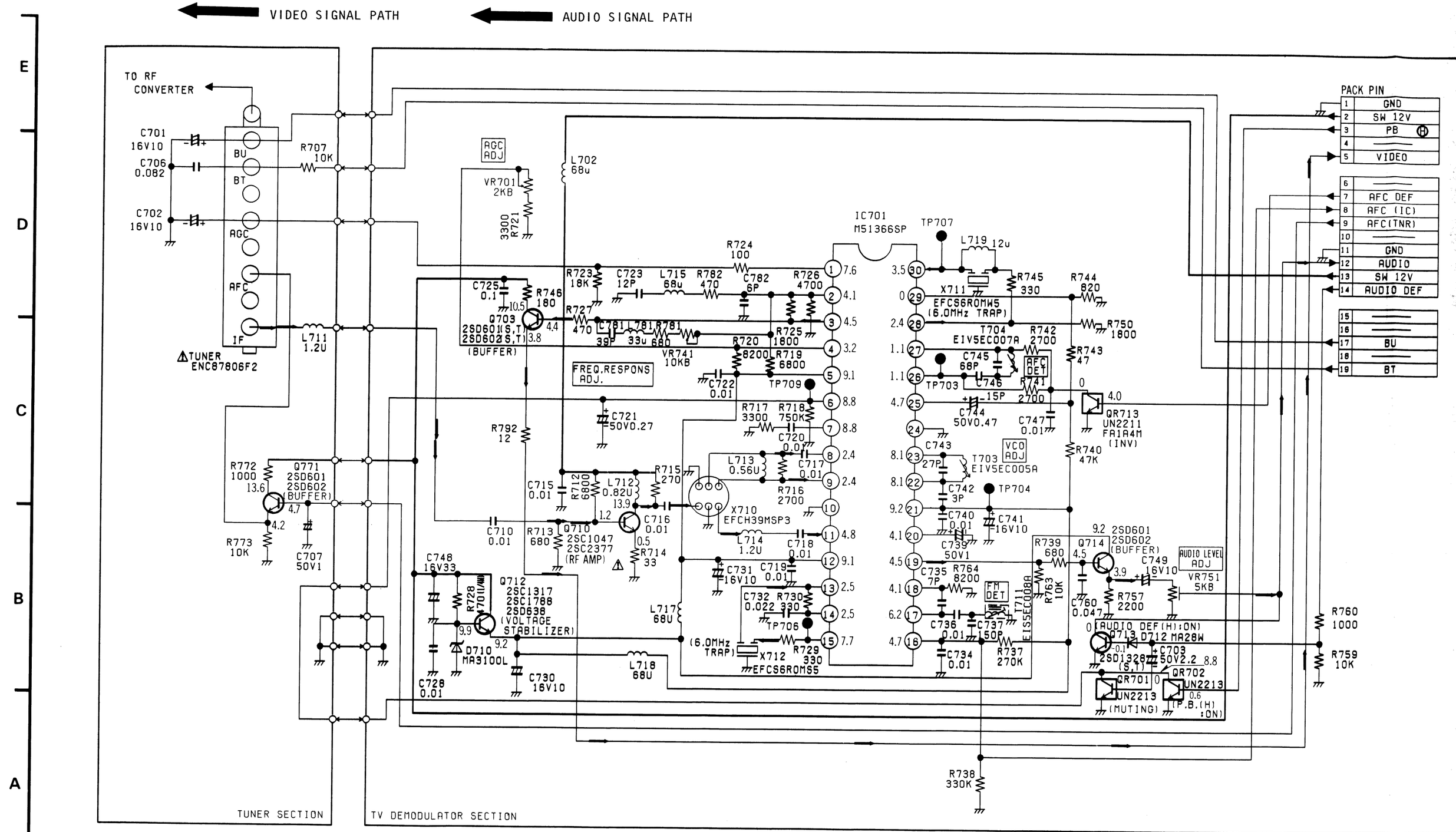

NOTE: DO NOT USE THE PART NUMBER SHOWN ON THIS DRAWING FOR ORDERING. THE CORRECT PART NUMBER IS SHOWN IN THE PARTS LIST, AND MAY BE SLIGHTLY DIFFERENT OR AMENDED SINCE THIS DRAWING WAS PREPARED.

NOTE: THE MEASUREMENT MODE OF THE DC VOLTAGE ON THIS DIAGRAM IS STOP MODE.

AUDIO SIGNAL PATH

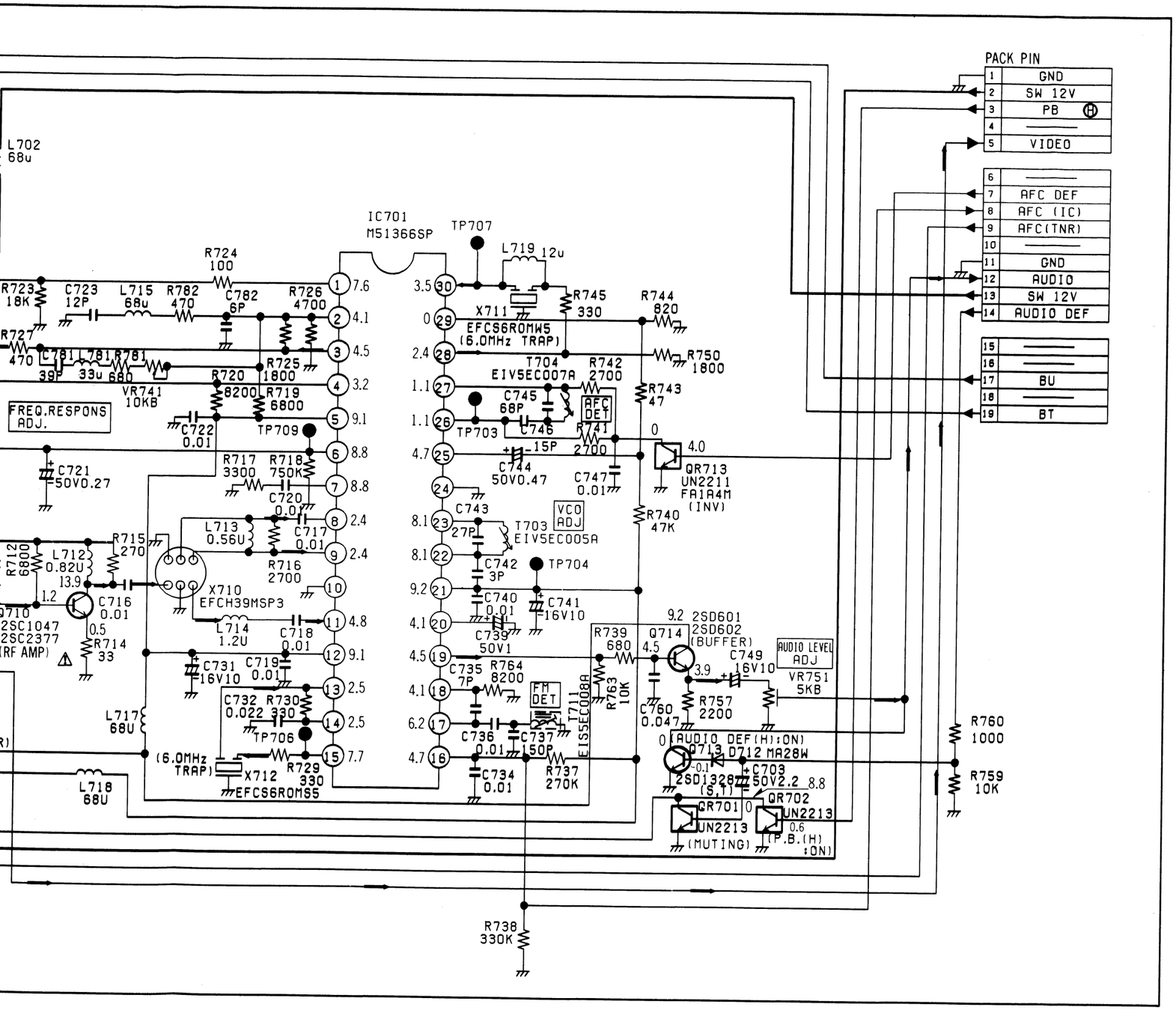

T PART NUMBER IS SHOWN
NG WAS PREPARED.

NOTE: THE MEASUREMENT MODE OF THE DC VOLTAGE ON THIS DIAGRAM IS STOP MODE.

IC BLOCK
IC701 (M51366SP)

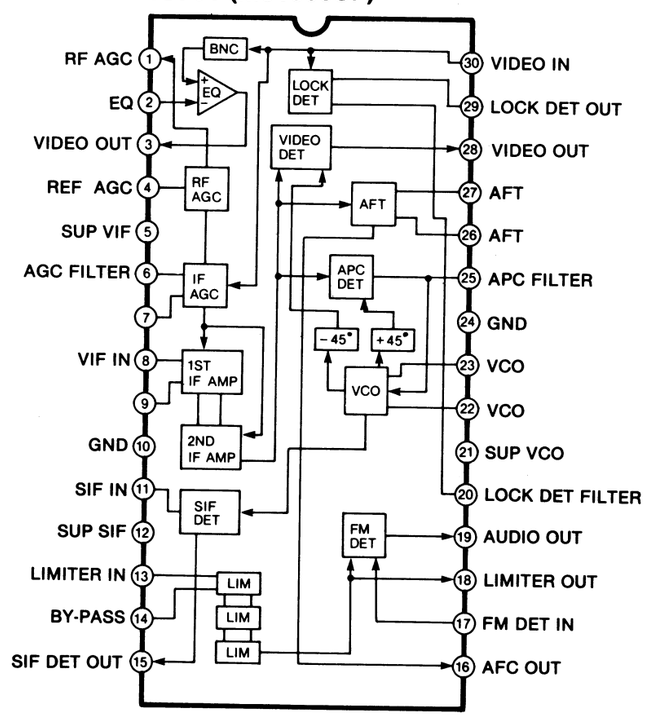

IMPORTANT SAFETY NOTICE:
COMPONENTS IDENTIFIED BY THE SIGN ⚠ HAVE SPECIAL CHARACTERISTICS IMPORTANT FOR SAFETY WHEN REPLACING ANY OF THESE COMPONENTS, USE ONLY THE SPECIFIED PARTS.

Next Page:
TIMER & OPERATION Section

3-34. TIMER & OPERATION SCHEMATIC DIAGRAM

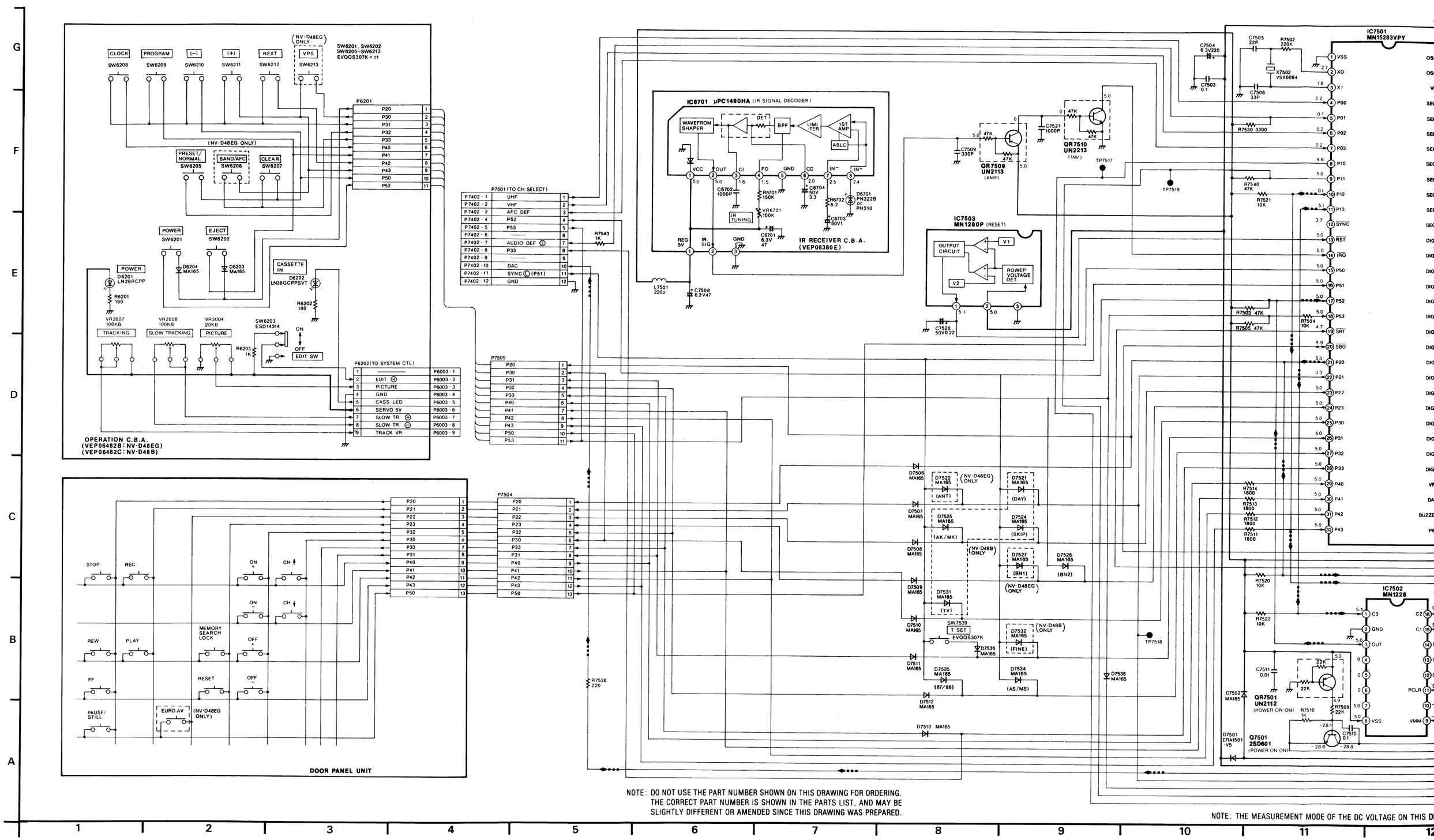

NOTE: DO NOT USE THE PART NUMBER SHOWN ON THIS DRAWING FOR ORDERING.
THE CORRECT PART NUMBER IS SHOWN IN THE PARTS LIST, AND MAY BE
SLIGHTLY DIFFERENT OR AMENDED SINCE THIS DRAWING WAS PREPARED.

NOTE: THE MEASUREMENT MODE OF THE DC VOLTAGE ON THIS DI

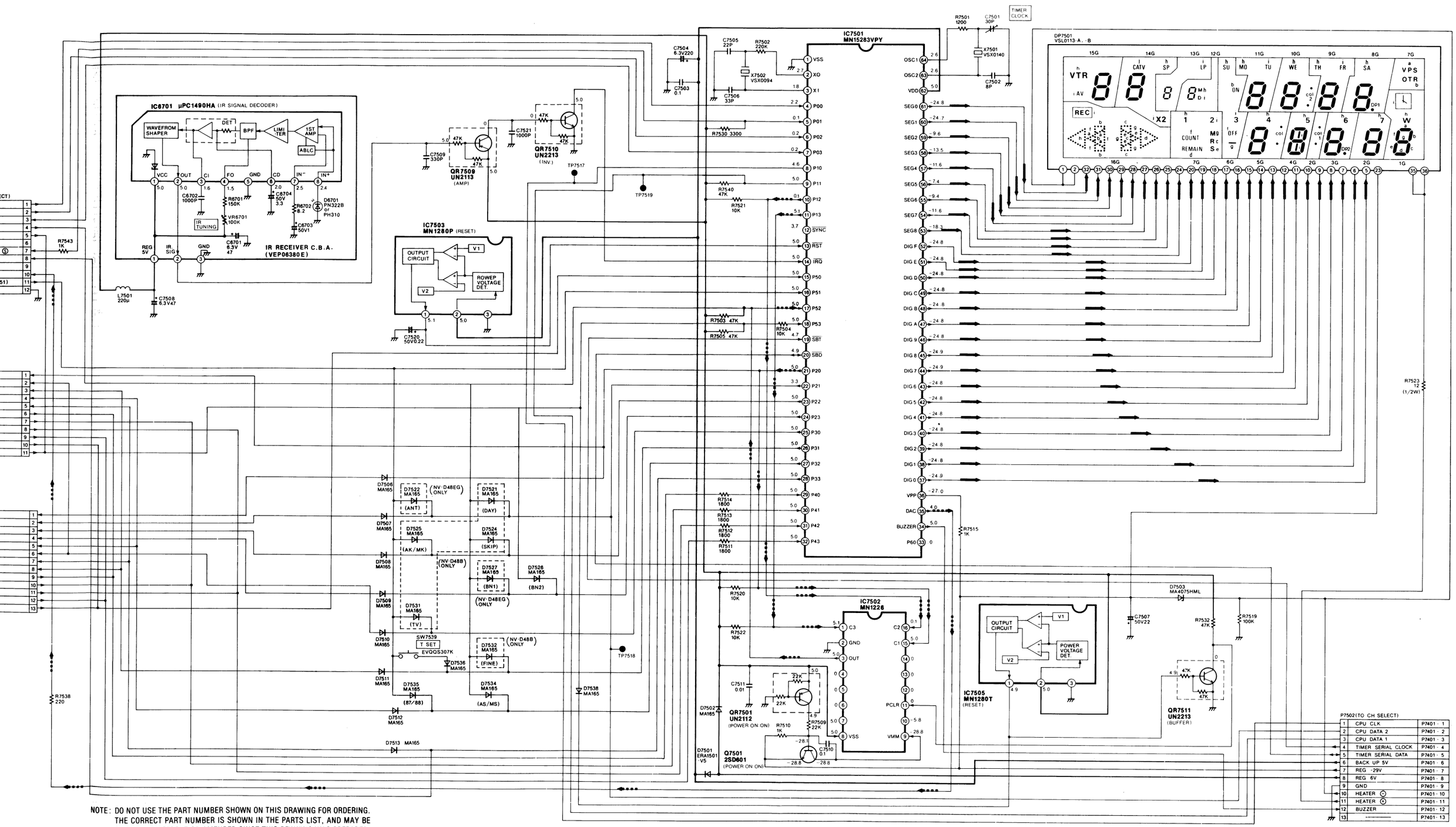

NOTE: DO NOT USE THE PART NUMBER SHOWN ON THIS DRAWING FOR ORDERING. THE CORRECT PART NUMBER IS SHOWN IN THE PARTS LIST, AND MAY BE SLIGHTLY DIFFERENT OR AMENDED SINCE THIS DRAWING WAS PREPARED.

NOTE: THE MEASUREMENT MODE OF THE DC VOLTAGE ON THIS DIAGRAM IS STOP MODE.

3-33. TUNER & TV DEMODULATOR PACK SCHEMATIC DIAGRAM (NV-D48B)

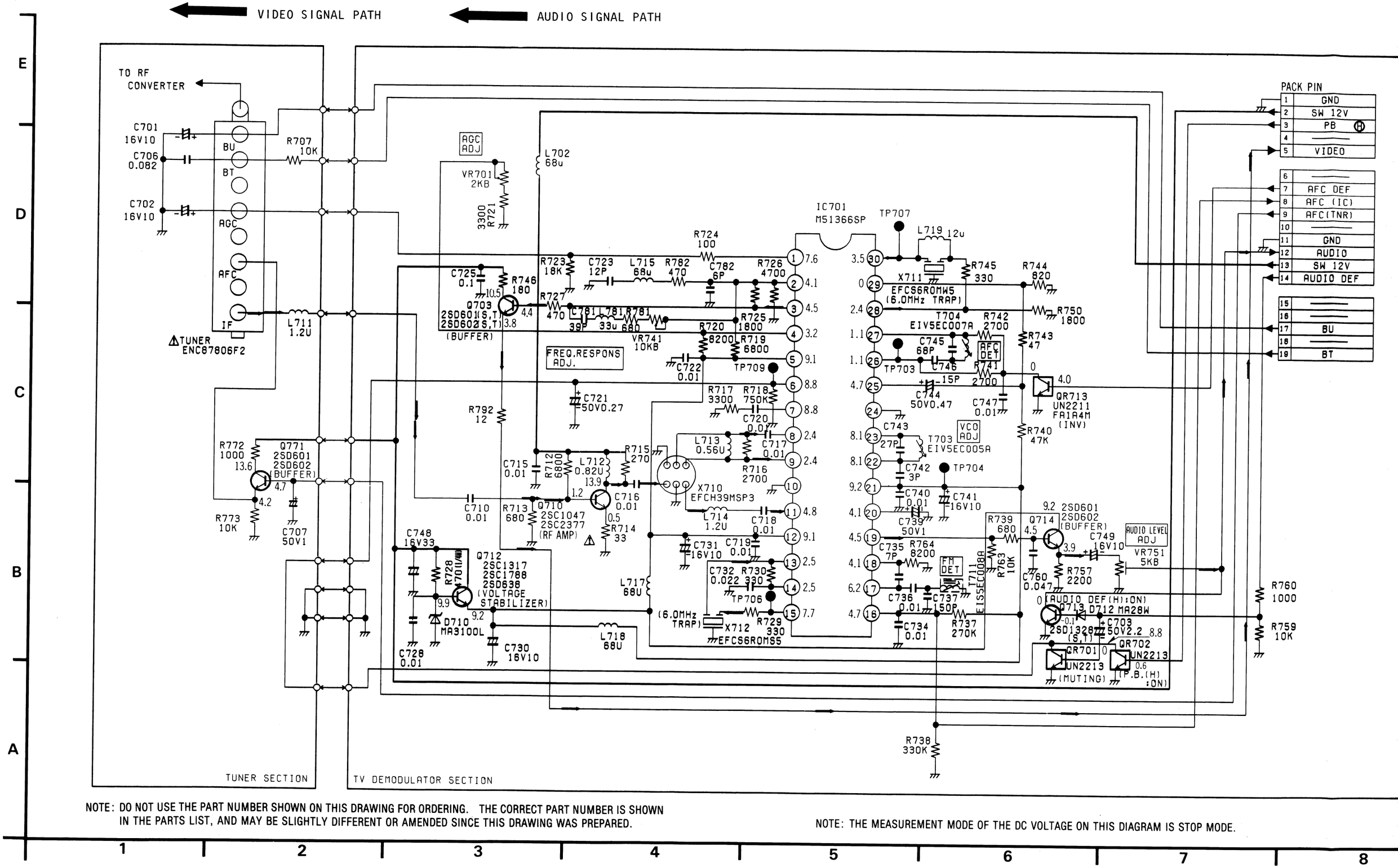

NOTE: DO NOT USE THE PART NUMBER SHOWN ON THIS DRAWING FOR ORDERING. THE CORRECT PART NUMBER IS SHOWN IN THE PARTS LIST, AND MAY BE SLIGHTLY DIFFERENT OR AMENDED SINCE THIS DRAWING WAS PREPARED.

NOTE: THE MEASUREMENT MODE OF THE DC VOLTAGE ON THIS DIAGRAM IS STOP MODE.

AUDIO SIGNAL PATH

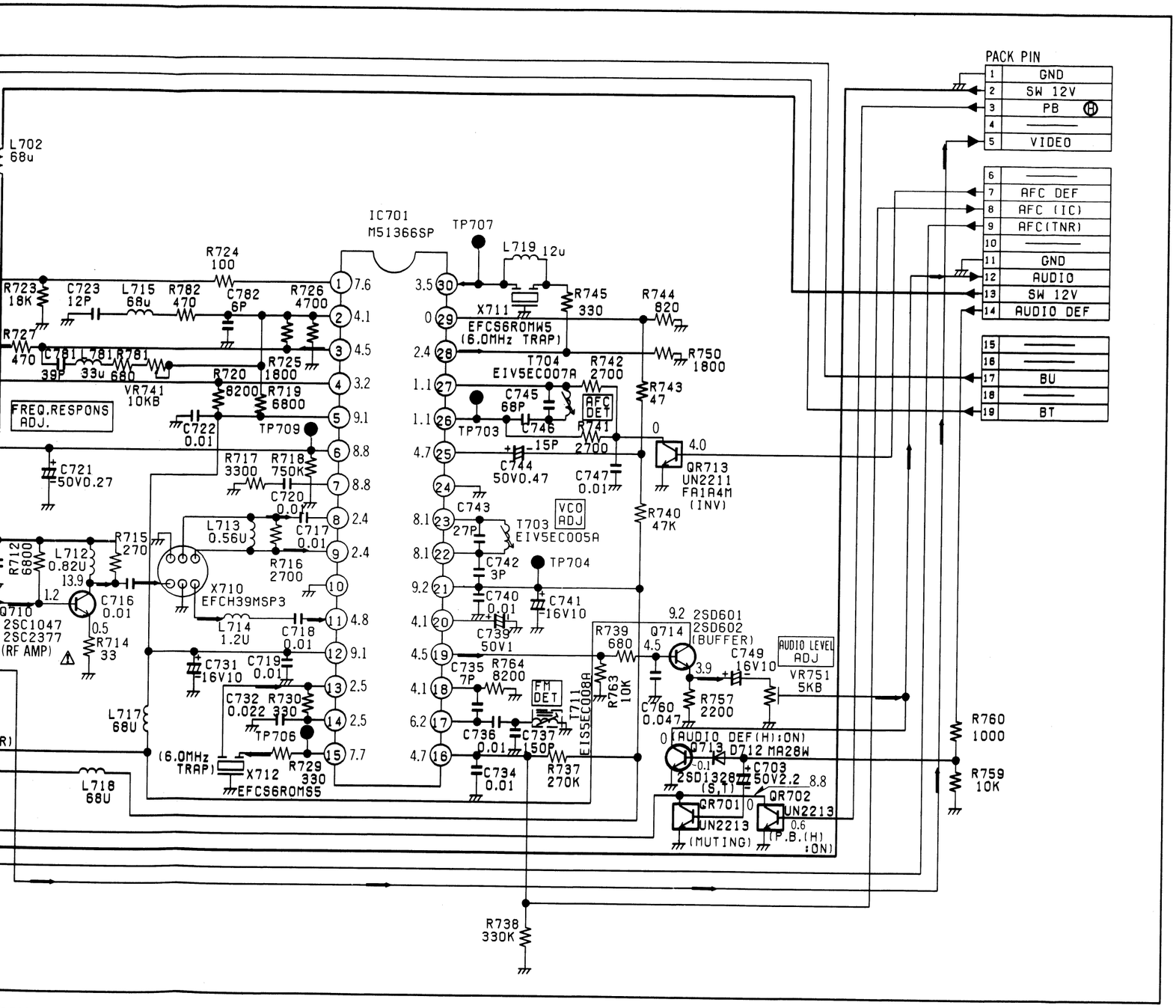

T PART NUMBER IS SHOWN
NG WAS PREPARED.

NOTE: THE MEASUREMENT MODE OF THE DC VOLTAGE ON THIS DIAGRAM IS STOP MODE.

4 5 6 7 8

IC BLOCK
IC701 (M51366SP)

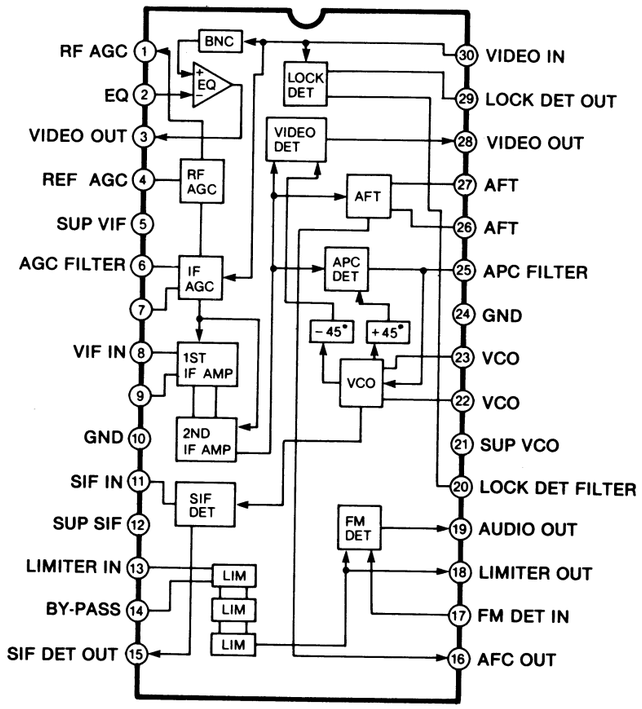

IMPORTANT SAFETY NOTICE:
COMPONENTS IDENTIFIED BY THE SIGN ⚠ HAVE SPECIAL CHARACTERISTICS IMPORTANT FOR SAFETY WHEN REPLACING ANY OF THESE COMPONENTS, USE ONLY THE SPECIFIED PARTS.

Next Page:
TIMER & OPERATION Section

3-34. TIMER & OPERATION SCHEMATIC DIAGRAM

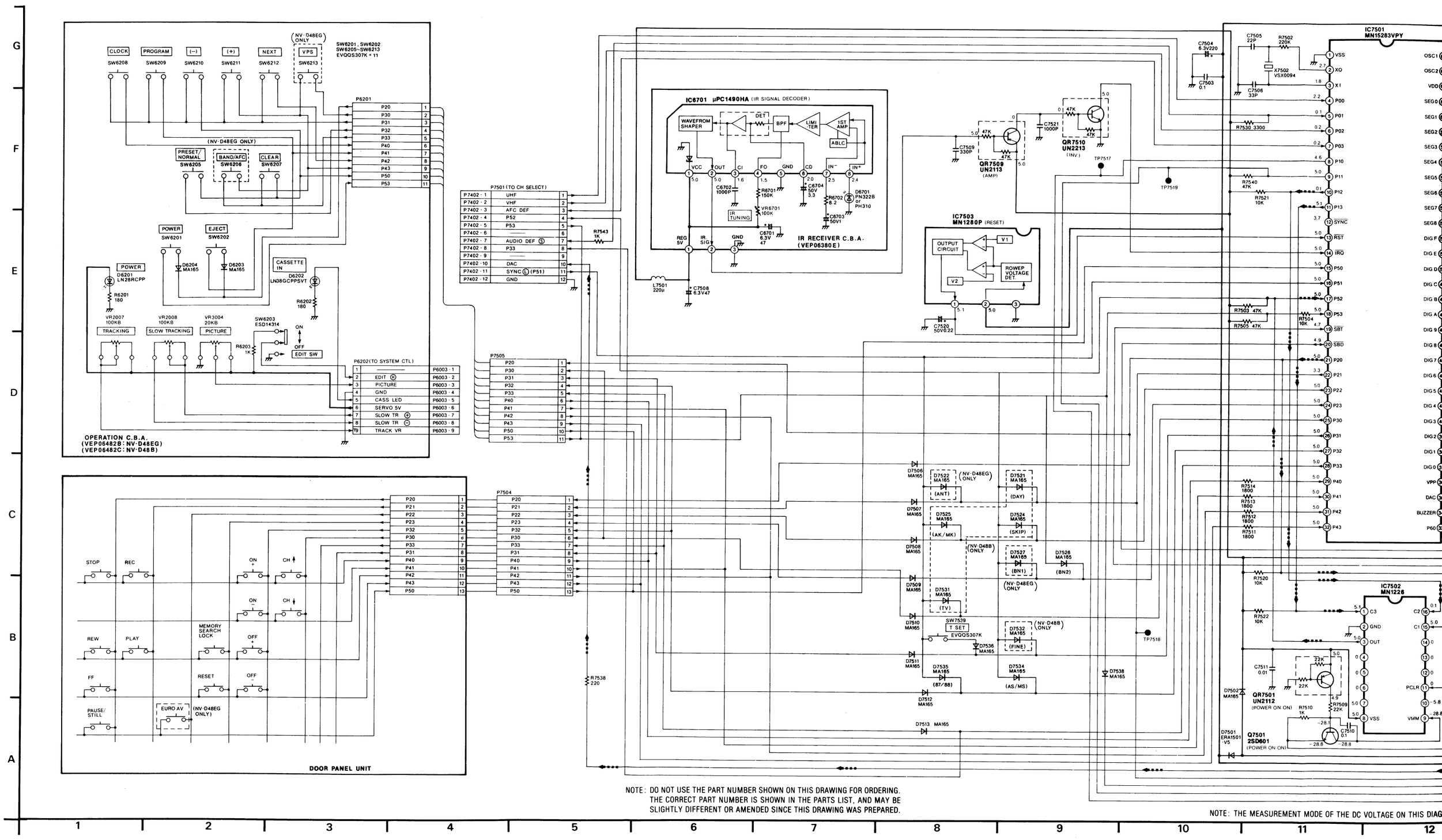

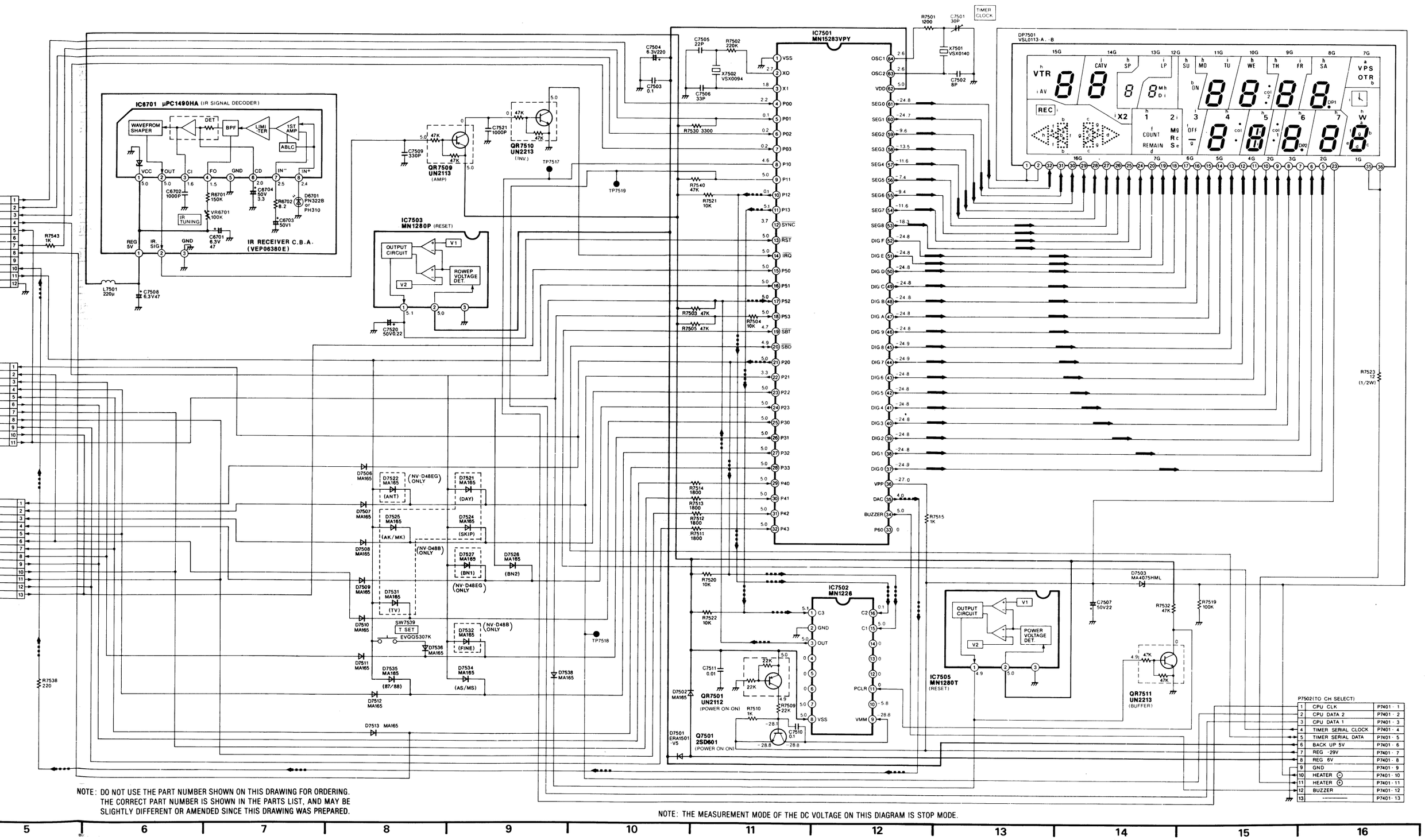
SEGMENT CONTROL SIGNAL
GRID CONTROL SIGNAL
TUNE CONTROL SIGNAL
IC6701 μPC1490HA (IR SIGNAL DECODER)
IR RECEIVER C.B.A. (VEP06380E)
IC7501 MN15283VPY
IC7503 MN1280P (RESET)
IC7502 MN1228
IC7505 MN1280T (RESET)
DP7501 VSL0113-A, -B
QR7509 UN2113 (AMP)
QR7510 UN2213 (INV.)
QR7501 UN2112 (POWER ON ON)
Q7501 2SD601 (POWER ON ON)
QR7511 UN2213 (BUFFER)
P7502(TO CH SELECT)
NOTE: DO NOT USE THE PART NUMBER SHOWN ON THIS DRAWING FOR ORDERING. THE CORRECT PART NUMBER IS SHOWN IN THE PARTS LIST, AND MAY BE SLIGHTLY DIFFERENT OR AMENDED SINCE THIS DRAWING WAS PREPARED.
NOTE: THE MEASUREMENT MODE OF THE DC VOLTAGE ON THIS DIAGRAM IS STOP MODE.

3-35. TIMER C.B.A. (VEP07450C: NV-D48EG) (VEP07450B: NV-D48) & OPERATION C.B.A. (VEP06482B: NV-D48EG) (VEP06482C: NV-D48B)

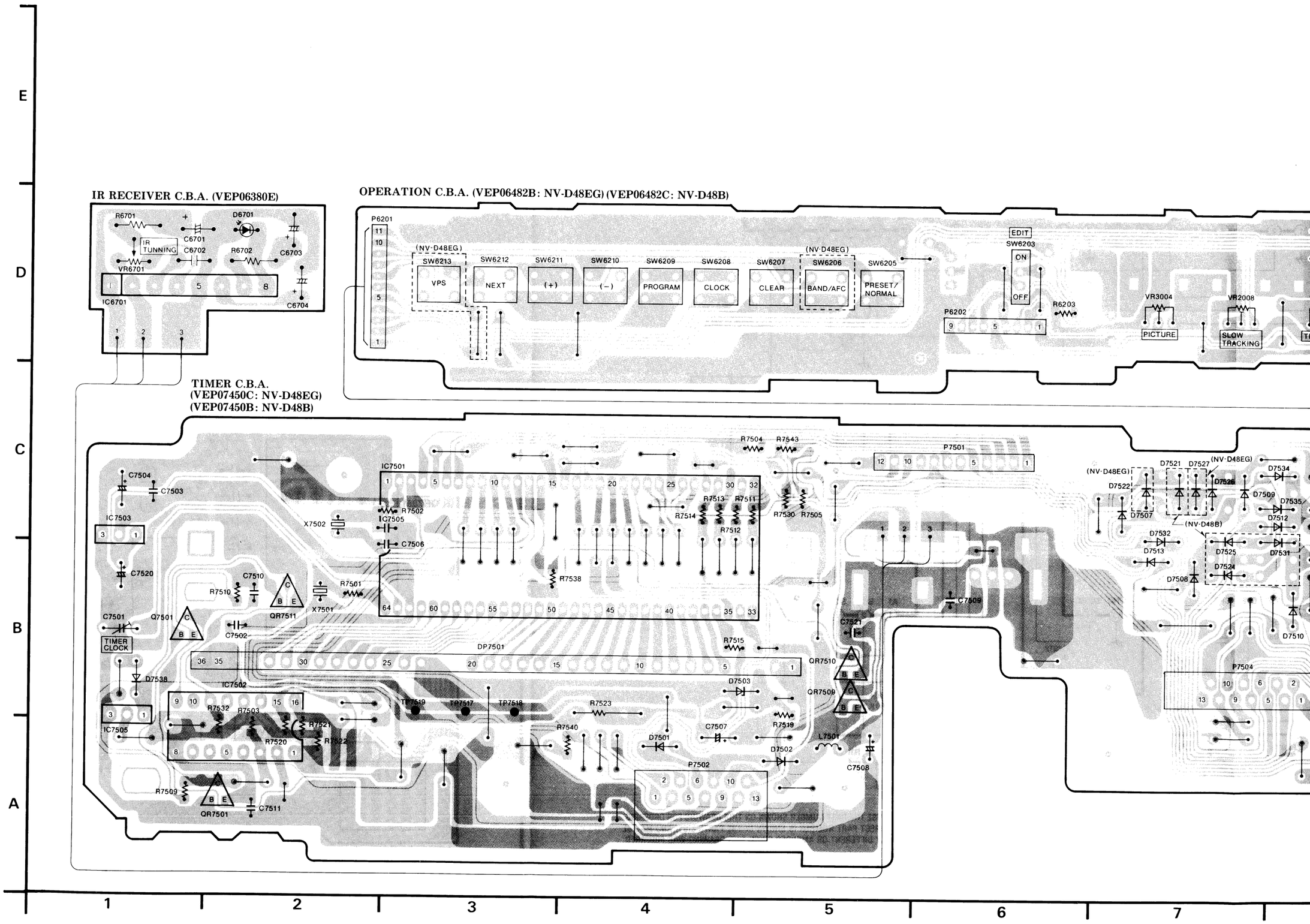

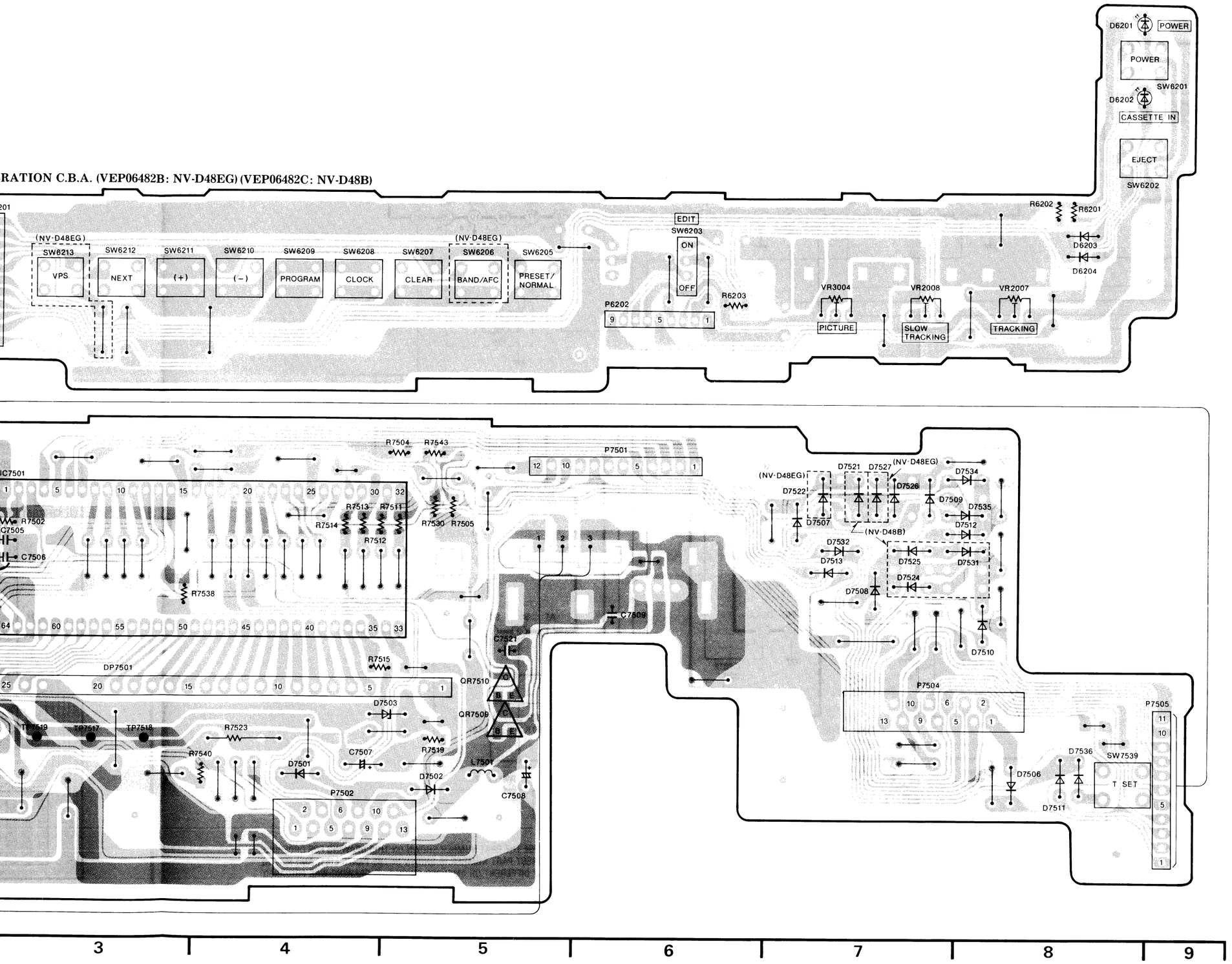

TIMER C.B.A. & OPERATION C.B.A.	
Transistor	
Q7501	B-1
Transistor & Resistor	
QR7501	A-2
QR7509	B-5
QR7510	B-5
QR7511	B-2
Integrated Circuit	
IC6701	D-1
IC7501	C-3
IC7502	B-2
IC7503	C-1
IC7505	A-1
Test Point	
TP7517	B-3
TP7518	B-3
TP7519	B-3
Adjustment	
VR2007	D-8
VR2008	D-7
VR3004	D-7
VR6701	D-1
C7501	B-1
Connector	
P6201	D-2
P6202	D-6
P7501	C-6
P7502	A-4
P7504	B-7
P7505	B-9

ADDRESS INFORMATION

Next Page:
VPS PACK Section

3-36. VPS PACK SCHEMATIC DIAGRAM (NV-D48EG)

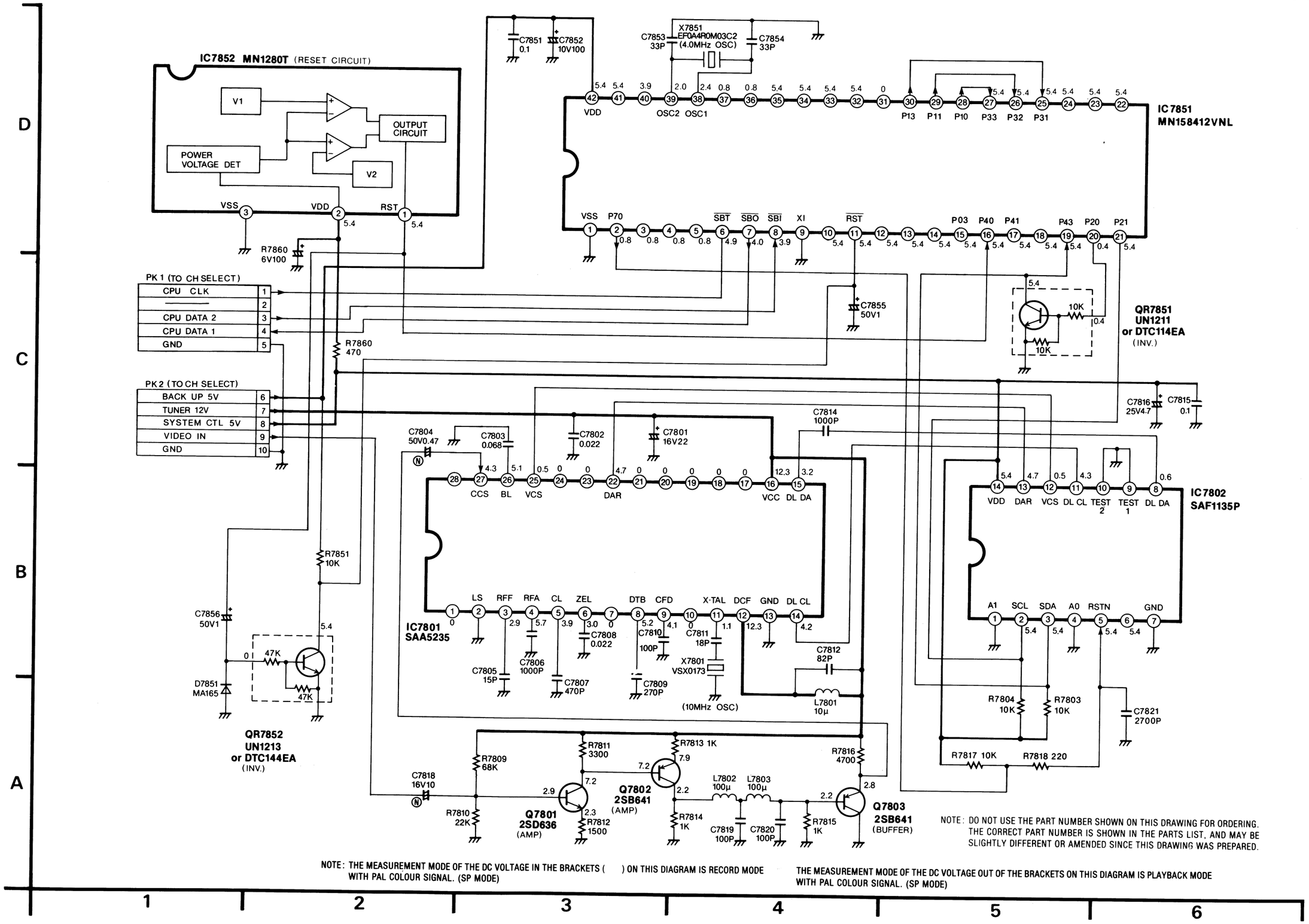

NOTE: DO NOT USE THE PART NUMBER SHOWN ON THIS DRAWING FOR ORDERING. THE CORRECT PART NUMBER IS SHOWN IN THE PARTS LIST, AND MAY BE SLIGHTLY DIFFERENT OR AMENDED SINCE THIS DRAWING WAS PREPARED.

NOTE: THE MEASUREMENT MODE OF THE DC VOLTAGE IN THE BRACKETS ( ) ON THIS DIAGRAM IS RECORD MODE WITH PAL COLOUR SIGNAL. (SP MODE)

THE MEASUREMENT MODE OF THE DC VOLTAGE OUT OF THE BRACKETS ON THIS DIAGRAM IS PLAYBACK MODE WITH PAL COLOUR SIGNAL. (SP MODE)

3-37. VPS PACK C.B.A.

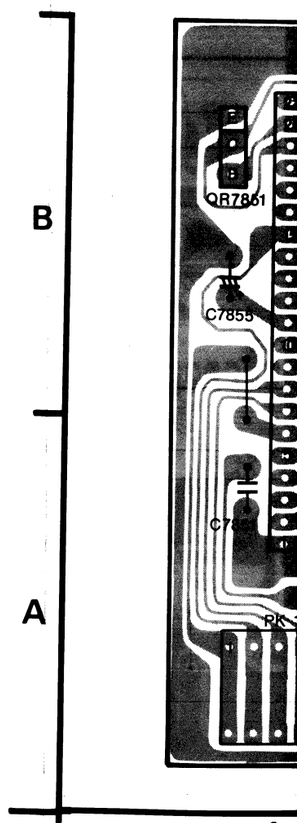

3-37. VPS PACK C.B.A. (VEP07439A: NV-D48EG)

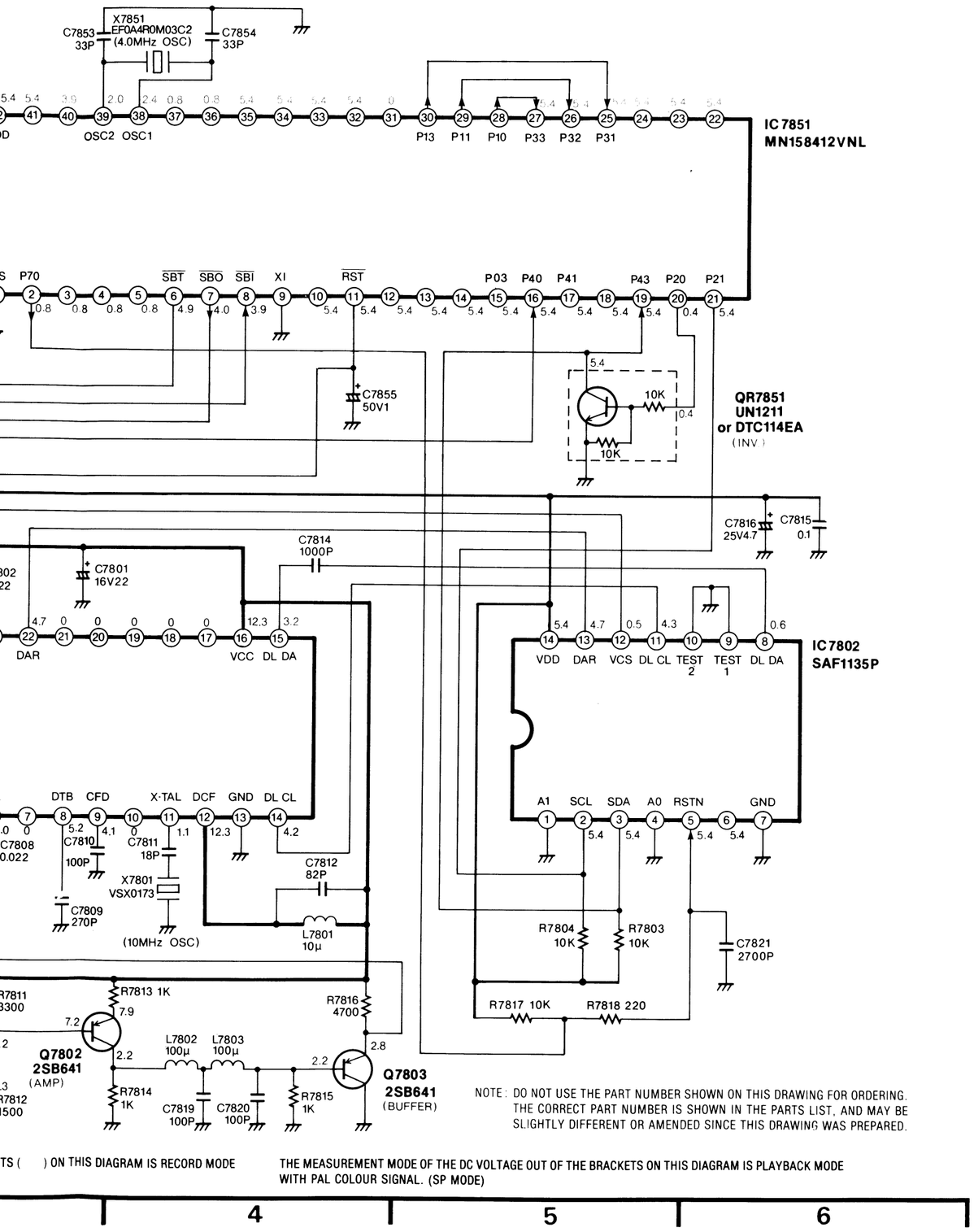

VPS PACK C.B.A.	
Transistor	
Q7801	A-3
Q7802	A-3
Q7803	B-2
Transistor & Resistor	
QR7851	B-1
QR7852	A-2
Integrated Circuit	
IC7801	A-3
IC7802	A-2
IC7851	B-1
IC7852	A-2

ADDRESS INFORMATION

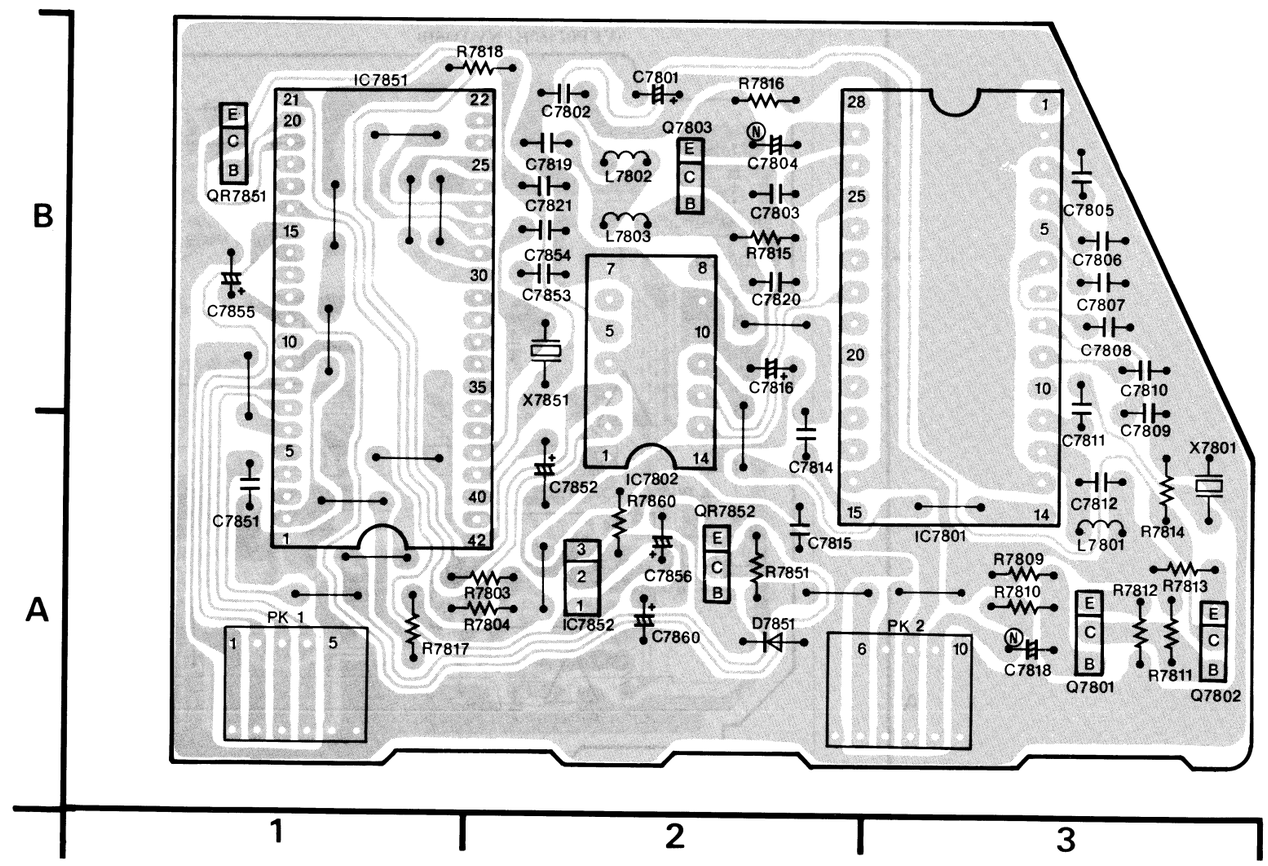

3-38. MAIN C.B.A. (VEP03493BE: NV-D48EG) (VEP03493BG: NV-D48B)

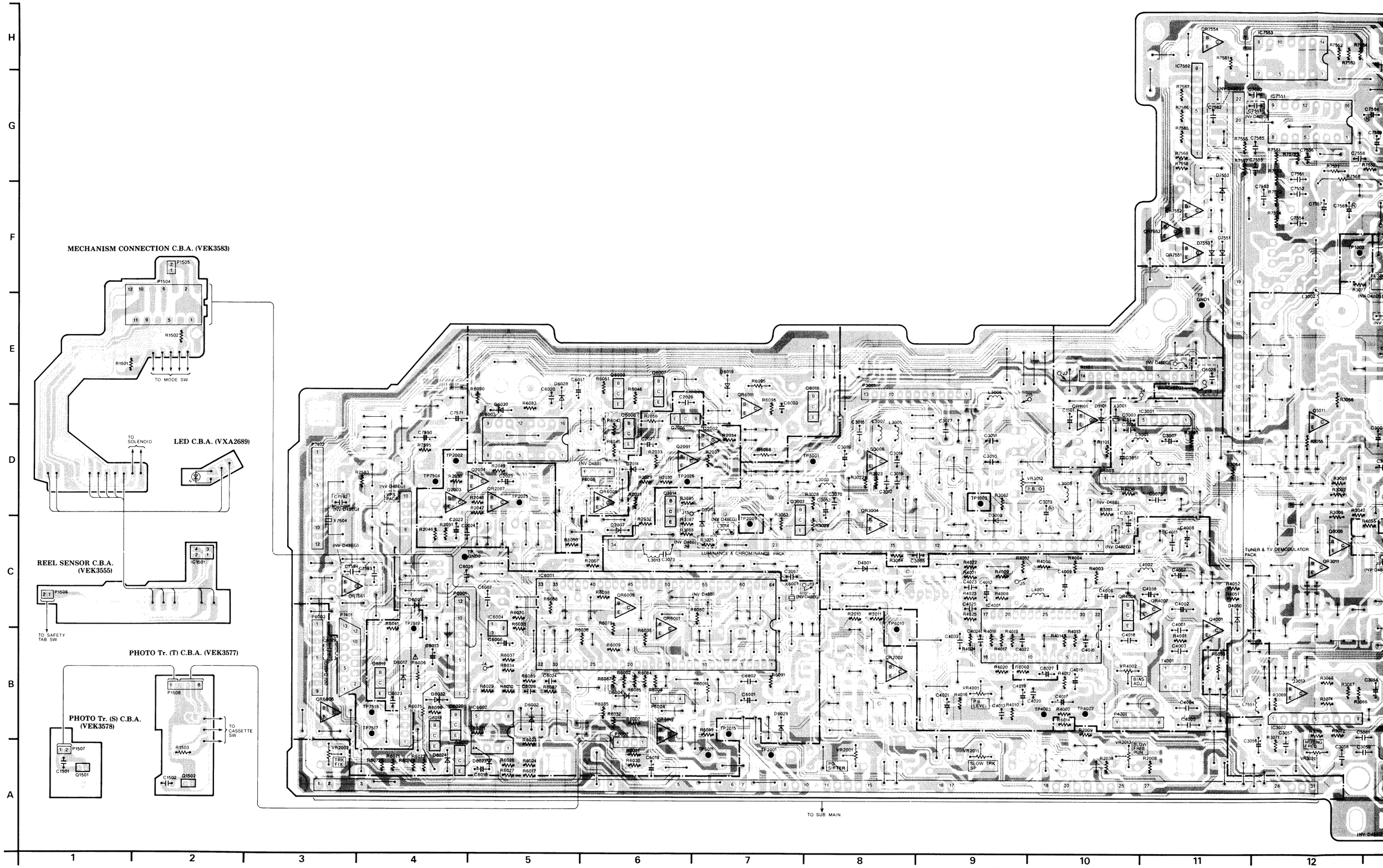

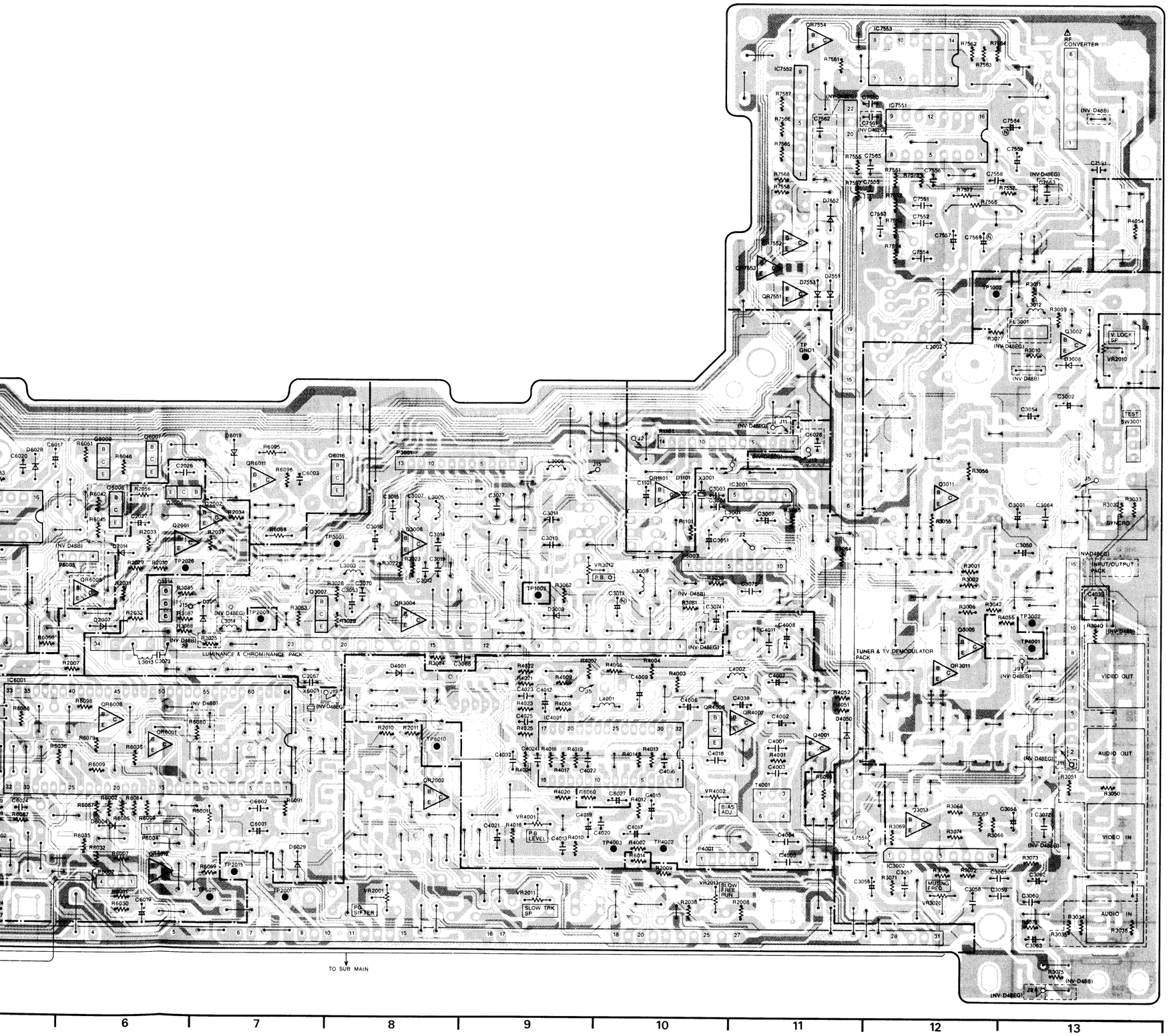

MAIN C.B.A. ADDRESS INFORMATION

POWER SUPPLY Section	
Transistor & Resistor	
QR1101	D-10
Test Point	
TP1002	F-12
TP1003	D-9
TP GND 1	E-11
Connector	
P1101	E-10

ADDRESS INFORMATION

SYSTEM CONTROL Section	
Transistor	
Q1501	A-1
Q1502	A-2
Q6006	D-6
Q6009	E-6
Q6016	E-8
Q6017	A-4
Q6018	B-4
Q6019	B-4
Q6020	B-4
Transistor & Resistor	
QR6001	C-6
QR6005	D-6
QR6006	B-3
QR6007	E-6
QR6008	C-6
QR6011	E-7
QR6012	B-6
Integrated Circuit	
IC1501	C-2
IC6001	C-5
IC6002	B-5
IC6003	D-5
IC6004	C-5
Test Point	
TP6010	C-8
TP6011	A-7
TP GND 2	C-5
Connector	
P1504	F-2
P1505	F-2
P1506	C-1
P1507	A-1
P1508	B-2
P6001	C-4
P6002	B-6
P6003	C-3
P6004	B-6
P6005	D-6

ADDRESS INFORMATION

SERVO Section	
Transistor	
Q2001	D-6
Q2002	D-7
Q2003	D-4
Q2004	D-5
Q2006	D-6
Transistor & Resistor	
QR2002	B-8
QR2007	D-5
Test Point	
TP2001	A-7
TP2002	D-4
TP2009	C-7
TP2015	B-7
TP2025	D-5
TP2026	D-6
Adjustment	
VR2001	A-8
VR2002	A-3
VR2010	E-13
VR2011	A-9
VR2013	A-10

ADDRESS INFORMATION

LUMINANCE & CHROMINANCE Section	
Transistor	
Q3002	F-13
Q3005	C-12
Q3006	D-8
Q3007	D-7
Q3011	D-12
Q3013	B-12
Transistor & Resistor	
QR3004	D-8
QR3011	C-12
QR3014	D-6
Integrated Circuit	
IC3001	D-11
IC3002	B-12
Test Point	
TP3001	D-8
TP3002	C-13
Adjustment	
VR3012	D-10
VR3020	A-12
Connector	
P3001	E-8
P3002	D-10

ADDRESS INFORMATION

AUDIO Section	
Transistor	
Q4001	C-11
Transistor & Resistor	
QR4006	C-10
QR4007	C-11
Integrated Circuit	
IC4001	C-9
Test Point	
TP4001	C-13
TP4002	B-10
TP4003	B-10
Adjustment	
VR4001	B-9
VR4002	B-10
Connector	
P4001	B-10

ADDRESS INFORMATION

CH SELECT Section	
Transistor & Resistor	
QR7551	F-11
QR7552	F-11
QR7553	F-11
QR7554	H-11
QR7561	C-3
Integrated Circuit	
IC7551	G-12
IC7552	G-11
IC7553	H-12
Test Point	
TP7504	D-4
TP7517	B-4
TP7518	B-4
TP7519	C-4
Connector	
P7401	C-3
P7402	D-3

ADDRESS INFORMATION

Next Page:
RF CONVERTER & DIGITAL SCANNER Section

3-39. RF CONVERTER SCHEMATIC DIAGRAM (ENC87966: NV-D48EG)

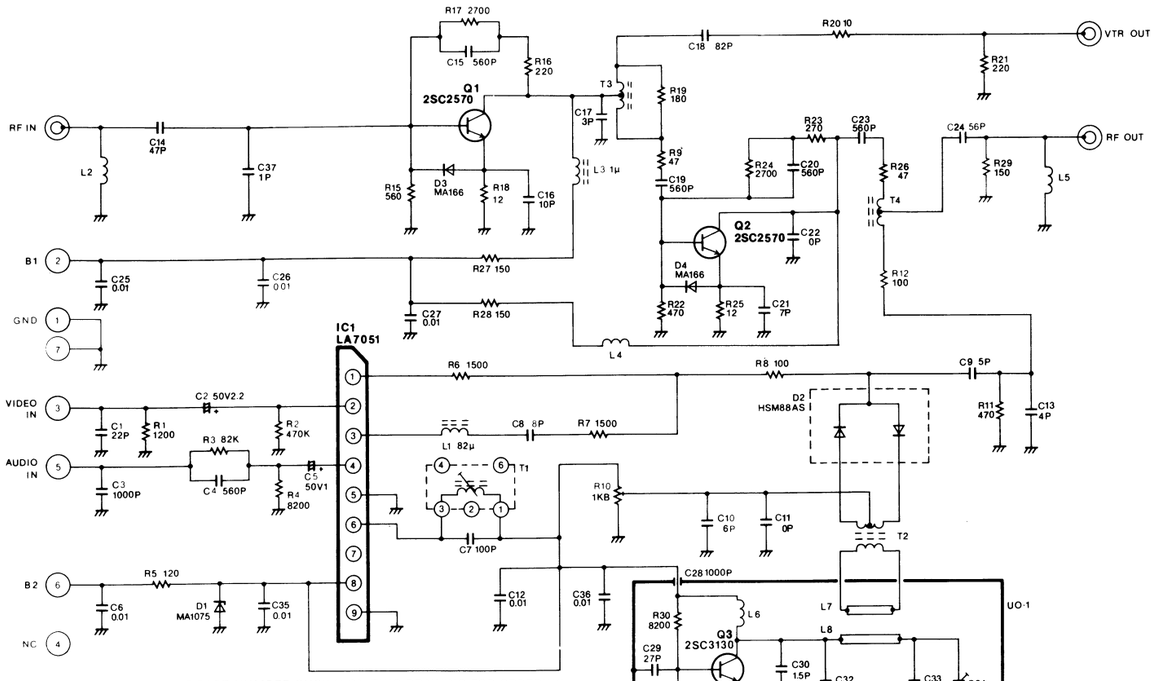

NOTE: DO NOT USE THE PART NUMBER SHOWN ON THIS DRAWING FOR ORDERING. THE CORRECT PART NUMBER IS SHOWN IN THE PARTS LIST, AND MAY BE SLIGHTLY DIFFERENT OR AMENDED SINCE THIS DRAWING WAS PREPARED.

3-40. RF CONVERTER SCHEMATIC DIAGRAM (ENC87962: NV-D48B)

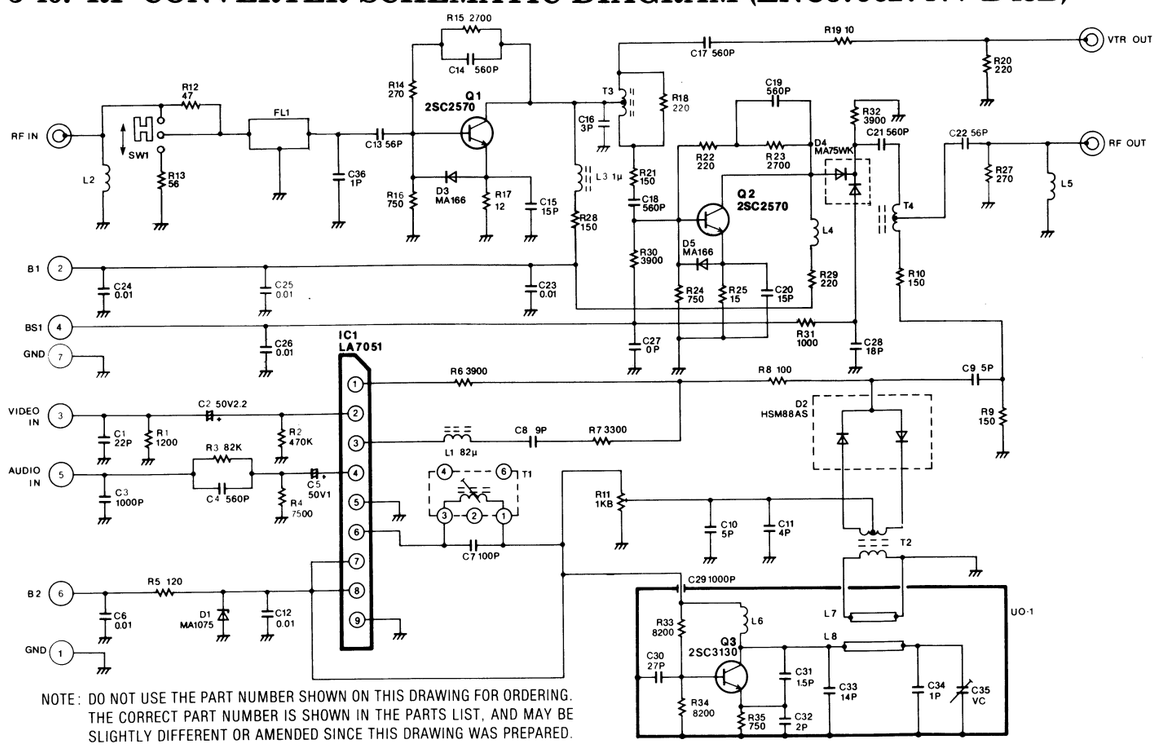

NOTE: DO NOT USE THE PART NUMBER SHOWN ON THIS DRAWING FOR ORDERING. THE CORRECT PART NUMBER IS SHOWN IN THE PARTS LIST, AND MAY BE SLIGHTLY DIFFERENT OR AMENDED SINCE THIS DRAWING WAS PREPARED.

3-41. DIGITAL SCANNER SCHEMATIC DIAGRAM
—— UNIT NO.: VEQ0691 (NV-D48EG), VEQ0692 (NV-D48B) ——

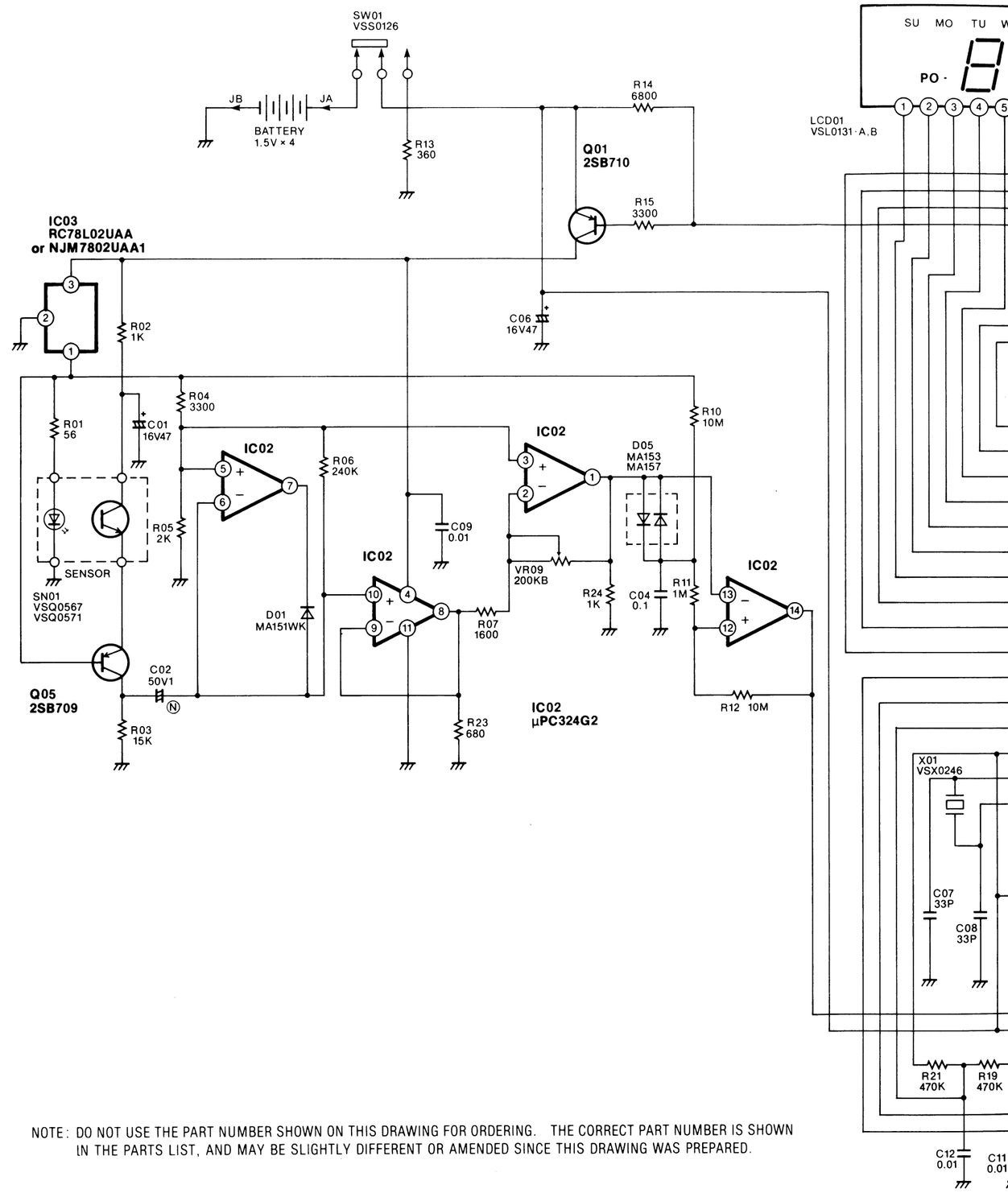

NOTE: DO NOT USE THE PART NUMBER SHOWN ON THIS DRAWING FOR ORDERING. THE CORRECT PART NUMBER IS SHOWN IN THE PARTS LIST, AND MAY BE SLIGHTLY DIFFERENT OR AMENDED SINCE THIS DRAWING WAS PREPARED.

3-41. DIGITAL SCANNER SCHEMATIC DIAGRAM
—— UNIT NO.: VEQ0691 (NV-D48EG), VEQ0692 (NV-D48B) ——

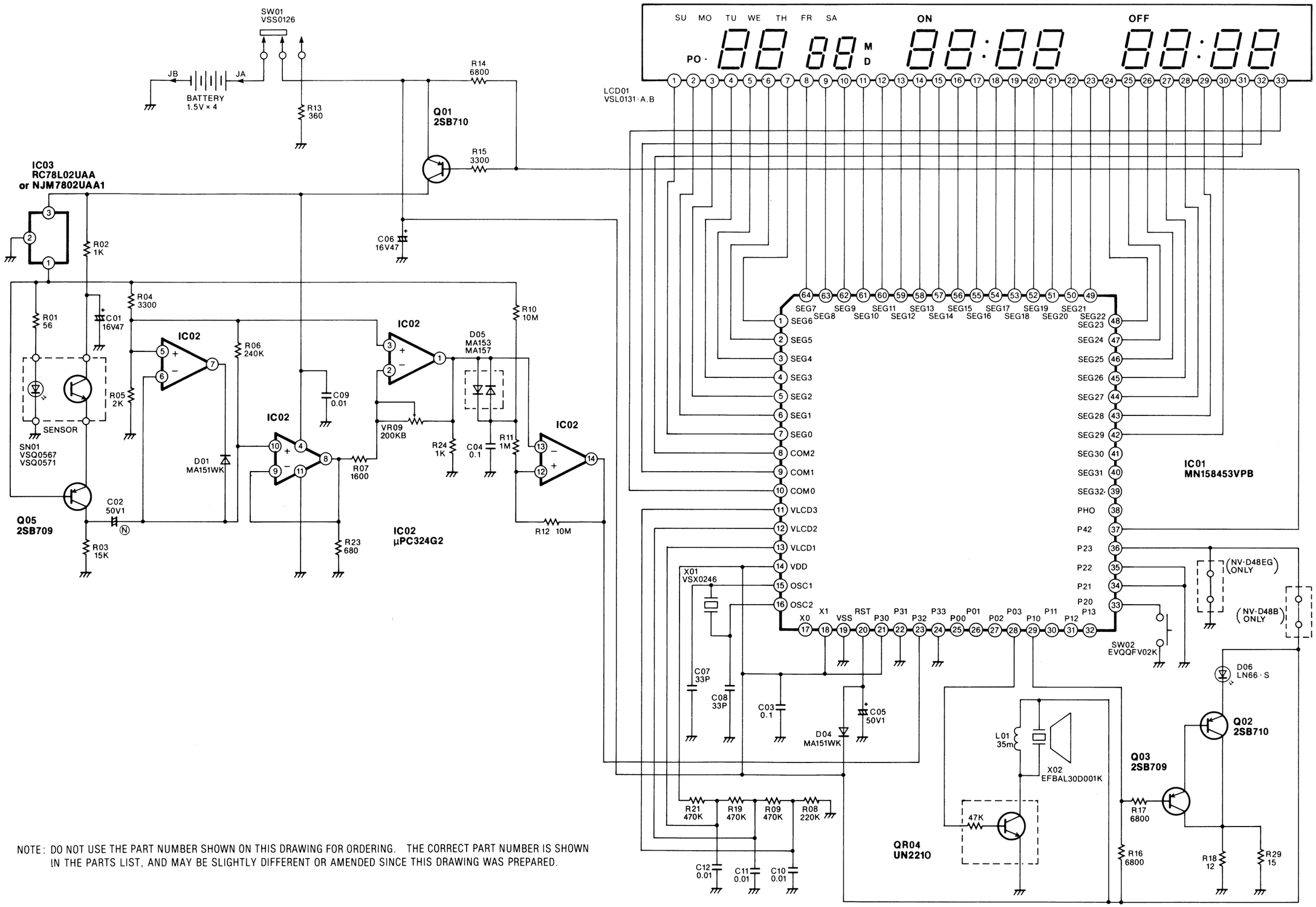

NOTE: DO NOT USE THE PART NUMBER SHOWN ON THIS DRAWING FOR ORDERING. THE CORRECT PART NUMBER IS SHOWN IN THE PARTS LIST, AND MAY BE SLIGHTLY DIFFERENT OR AMENDED SINCE THIS DRAWING WAS PREPARED.

3-42. DIGITAL SCANNER C.B.A. (VEP66039C: NV-D48EG) (VEP66039B: NV-D48B)

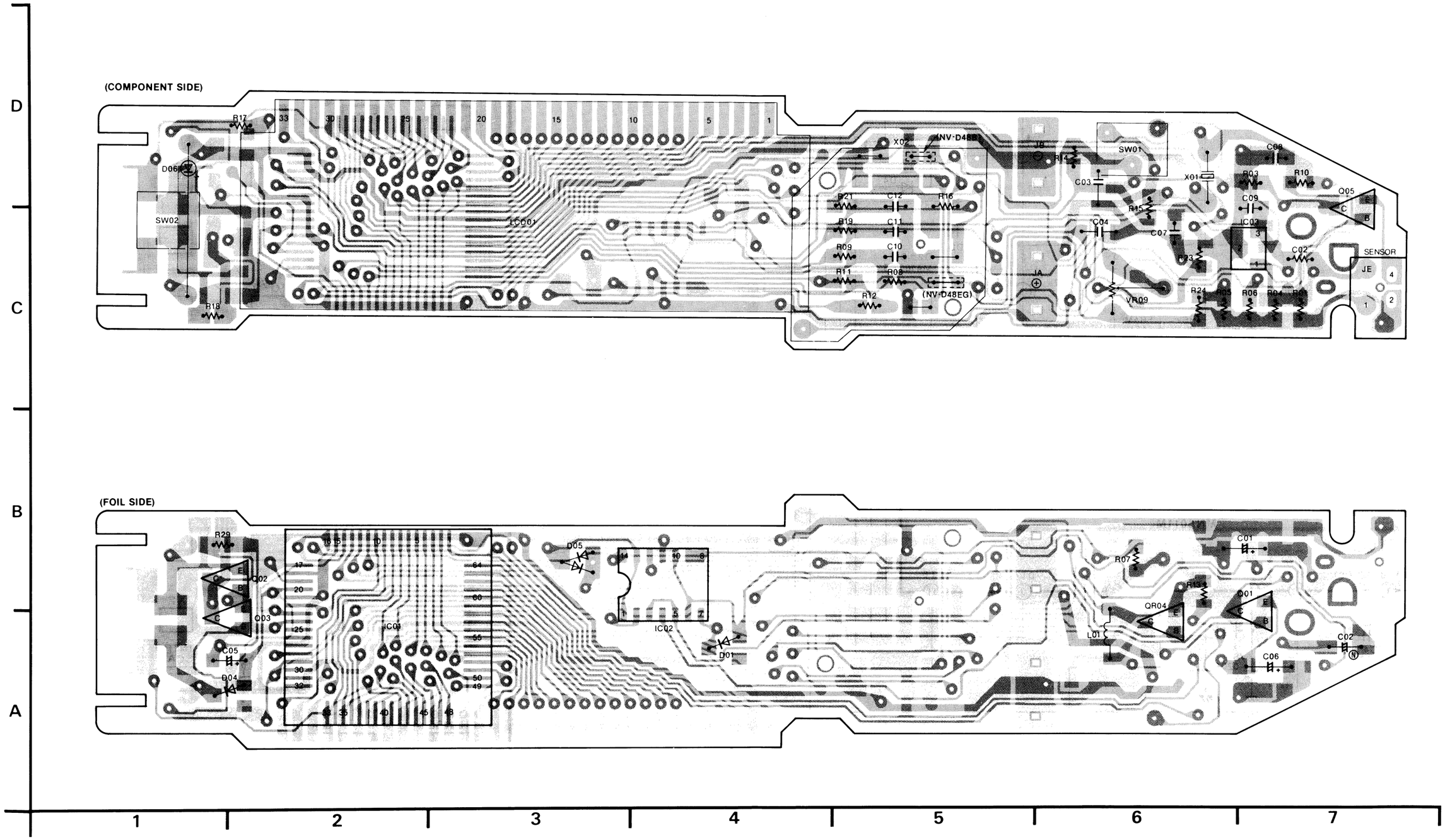

3-43. REMOTE CONTROLLER SCHEMATIC DIAGRAM
—— UNIT NO.: VEQ0709 (NV-D48EG), VEQ0710 (NV-D48B) ——

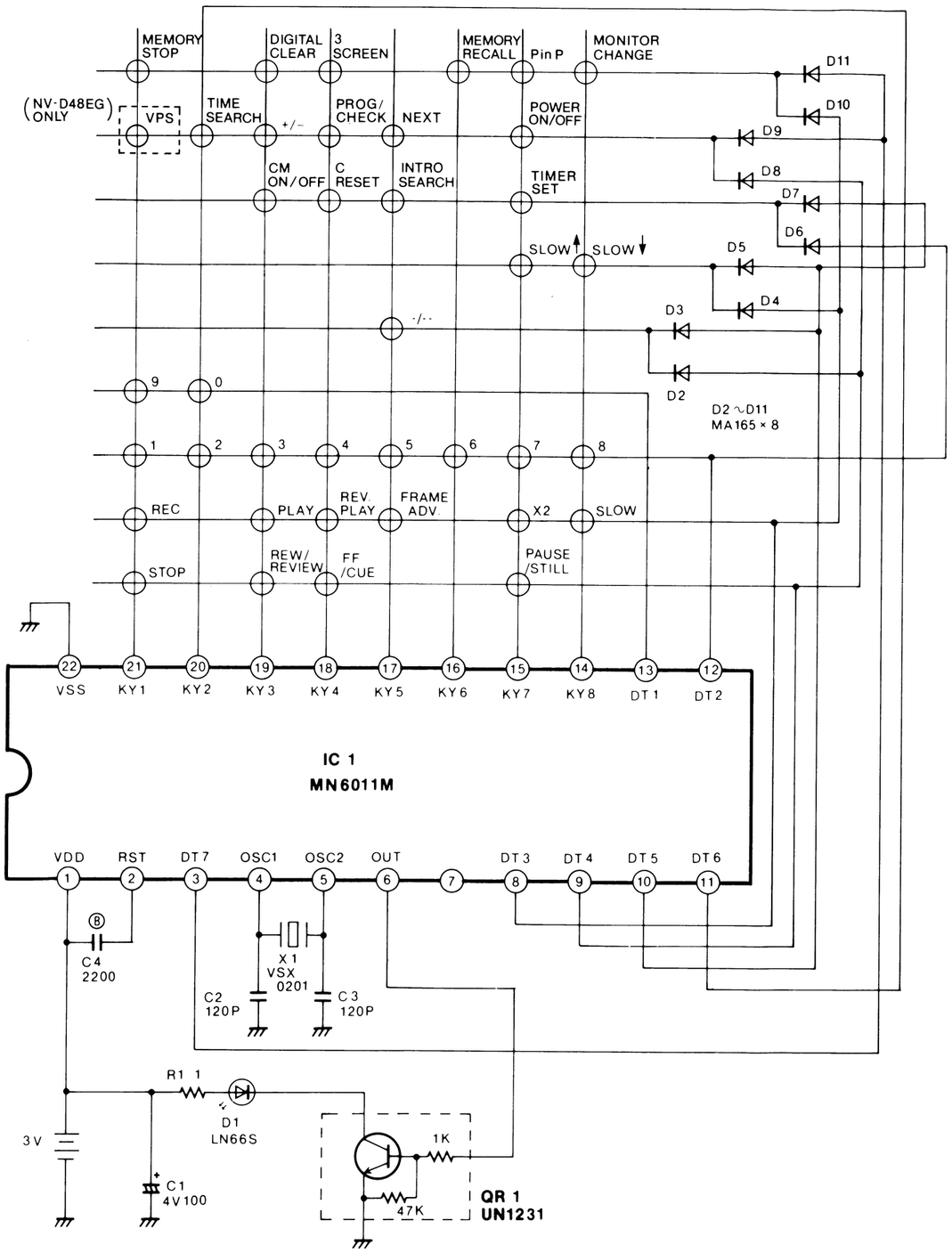

NOTE: DO NOT USE THE PART NUMBER SHOWN ON THIS DRAWING FOR ORDERING. THE CORRECT PART NUMBER IS SHOWN IN THE PARTS LIST, AND MAY BE SLIGHTLY DIFFERENT OR AMENDED SINCE THIS DRAWING WAS PREPARED.

Back Page:
DIGITAL SCANNER Section

3-44. REMOTE CONTROLLER C.B.A. (VEP66030C)

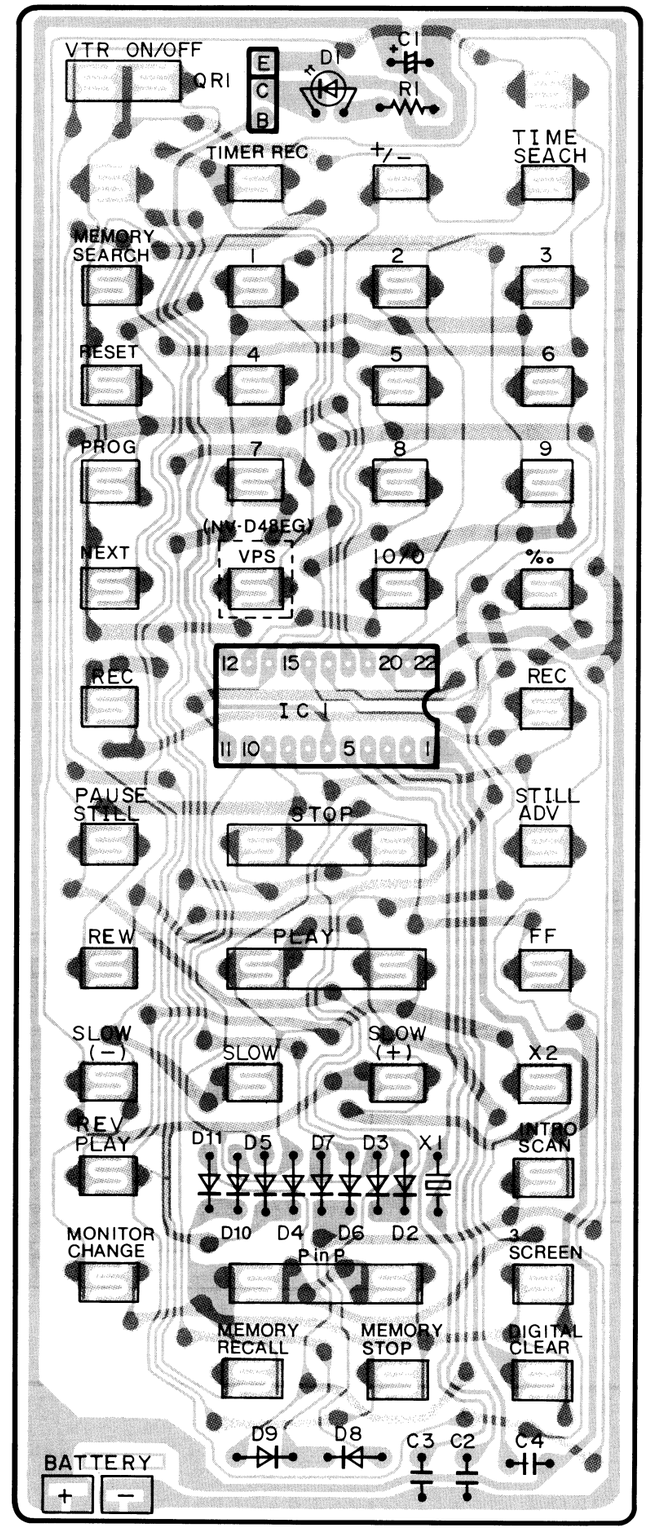

SECTION 4
EXPLODED VIEWS & PARTS LIST

4-1. EXPLODED VIEW ❶ CHASSIS PARTS SECTION (1)

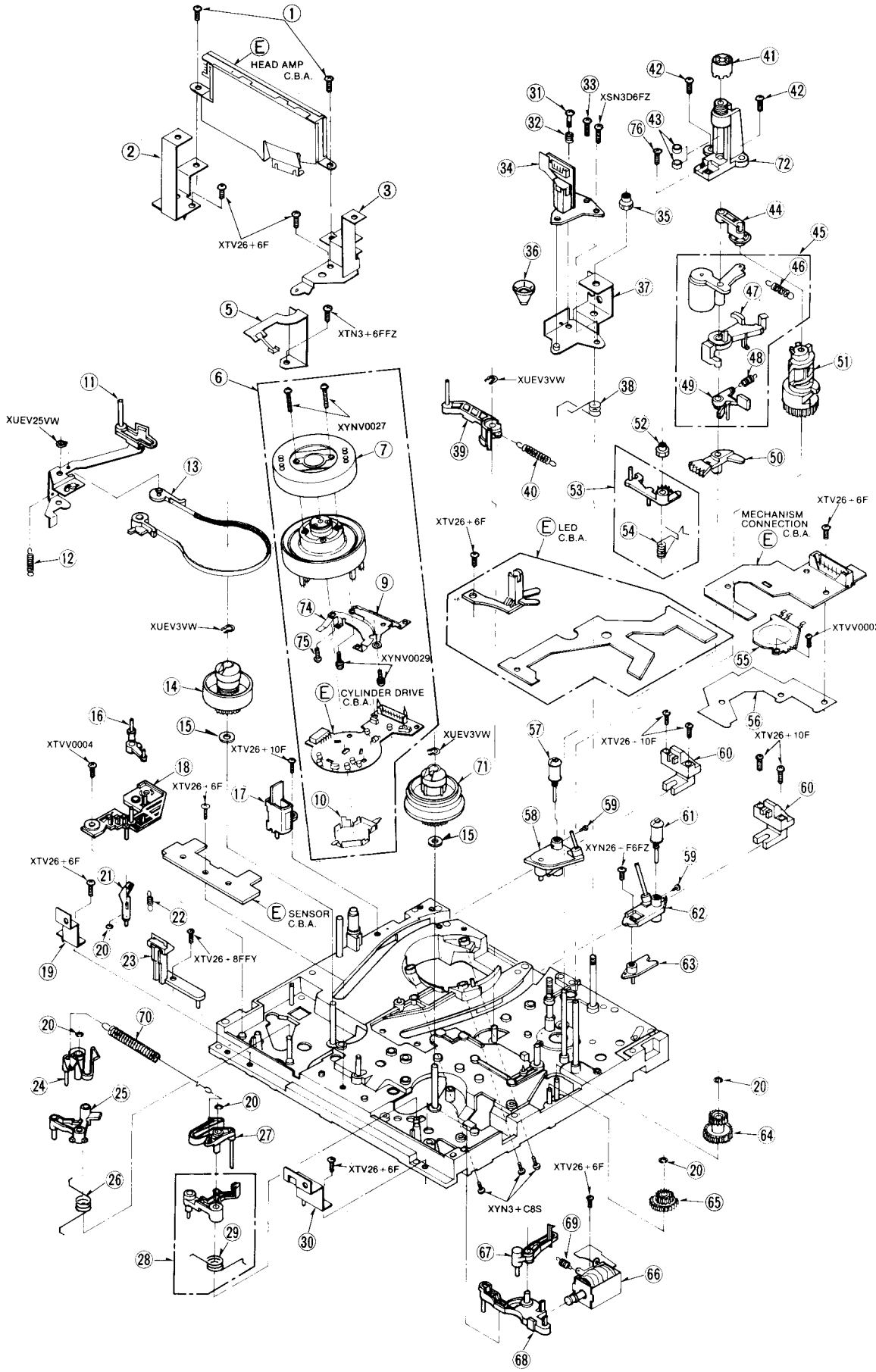

❷ CHASSIS PARTS SECTION (2)

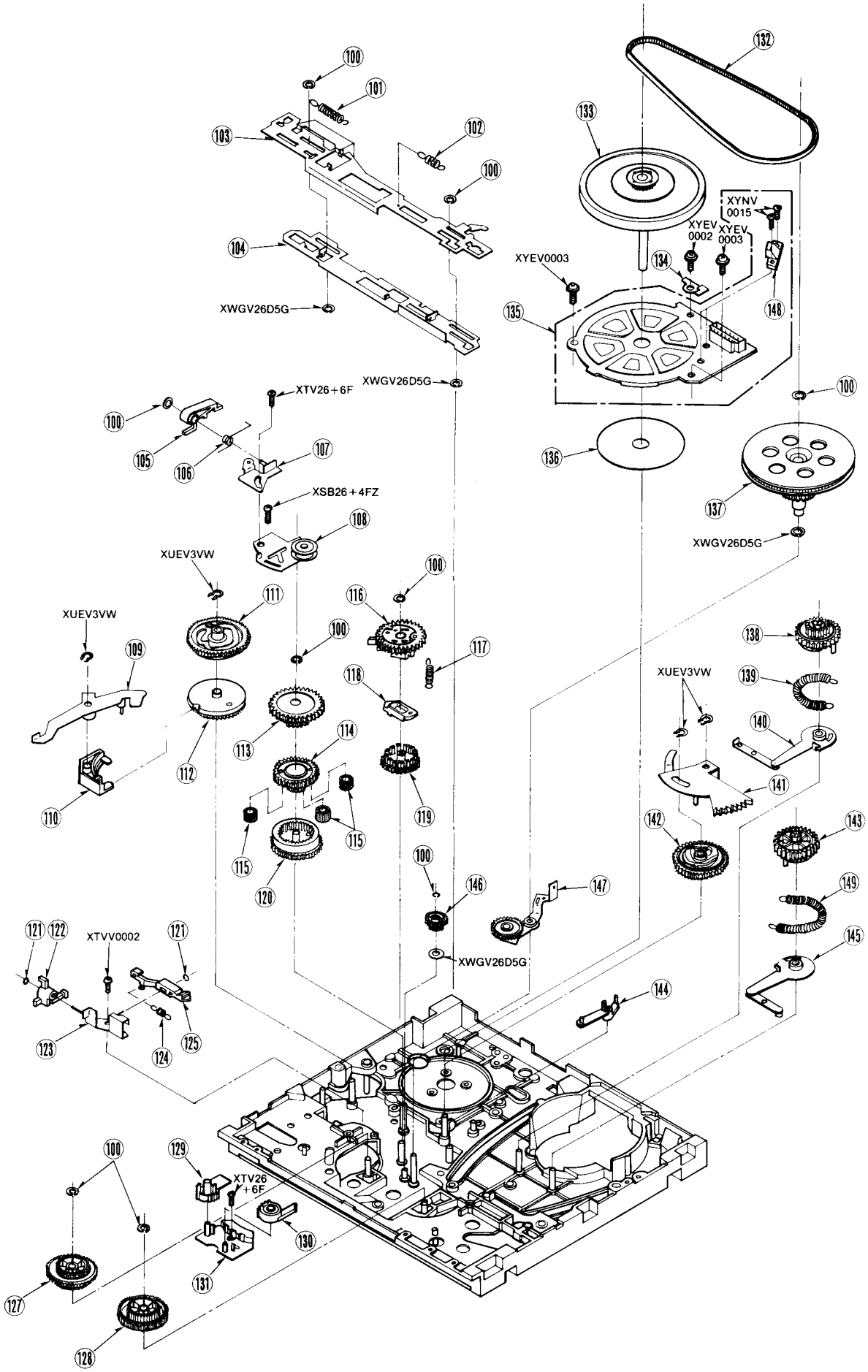

❸ CASSETTE UP MECHANISM SECTION

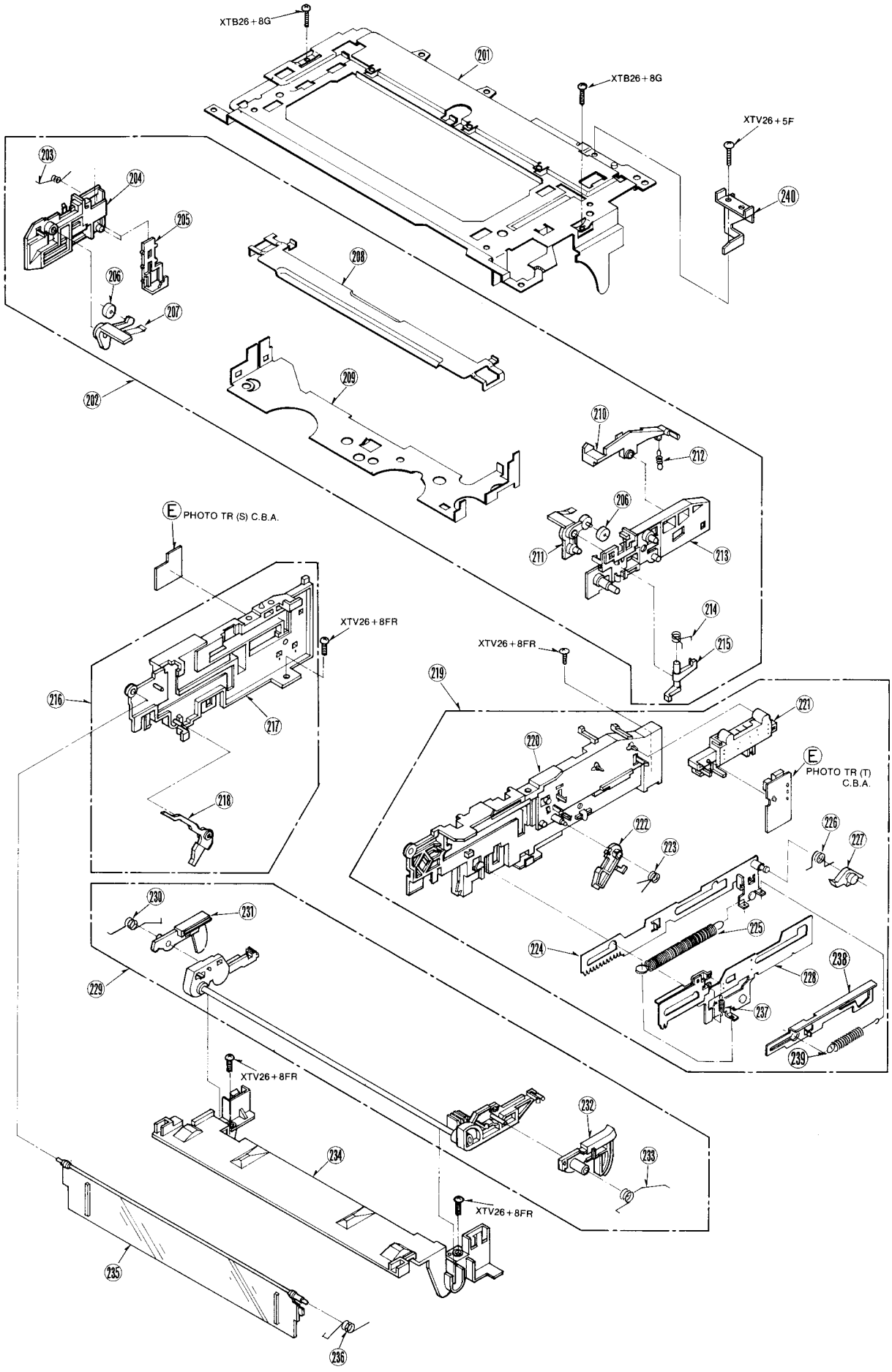

❹ CASING PARTS SECTION

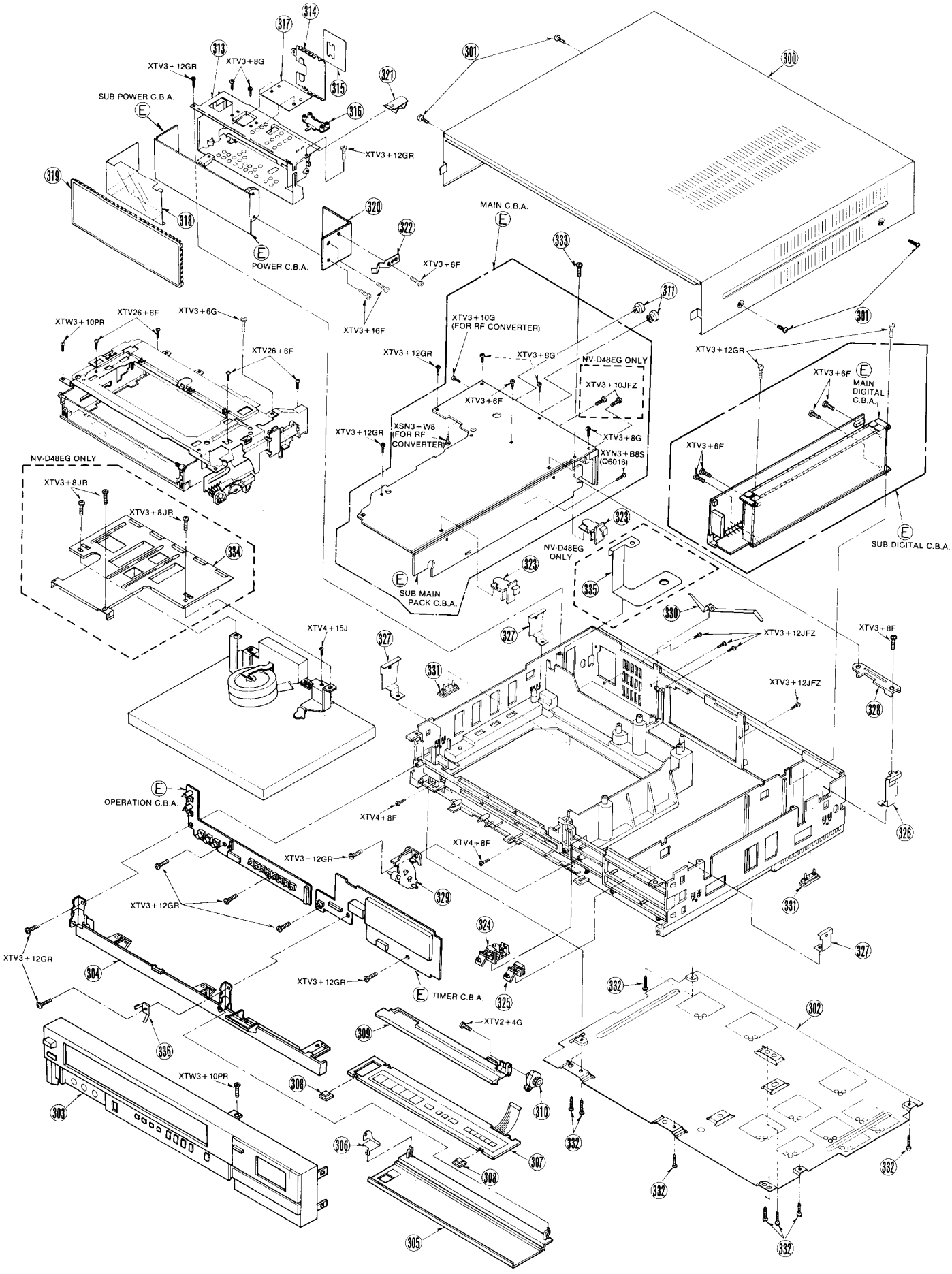

❺ PACKING PARTS SECTION

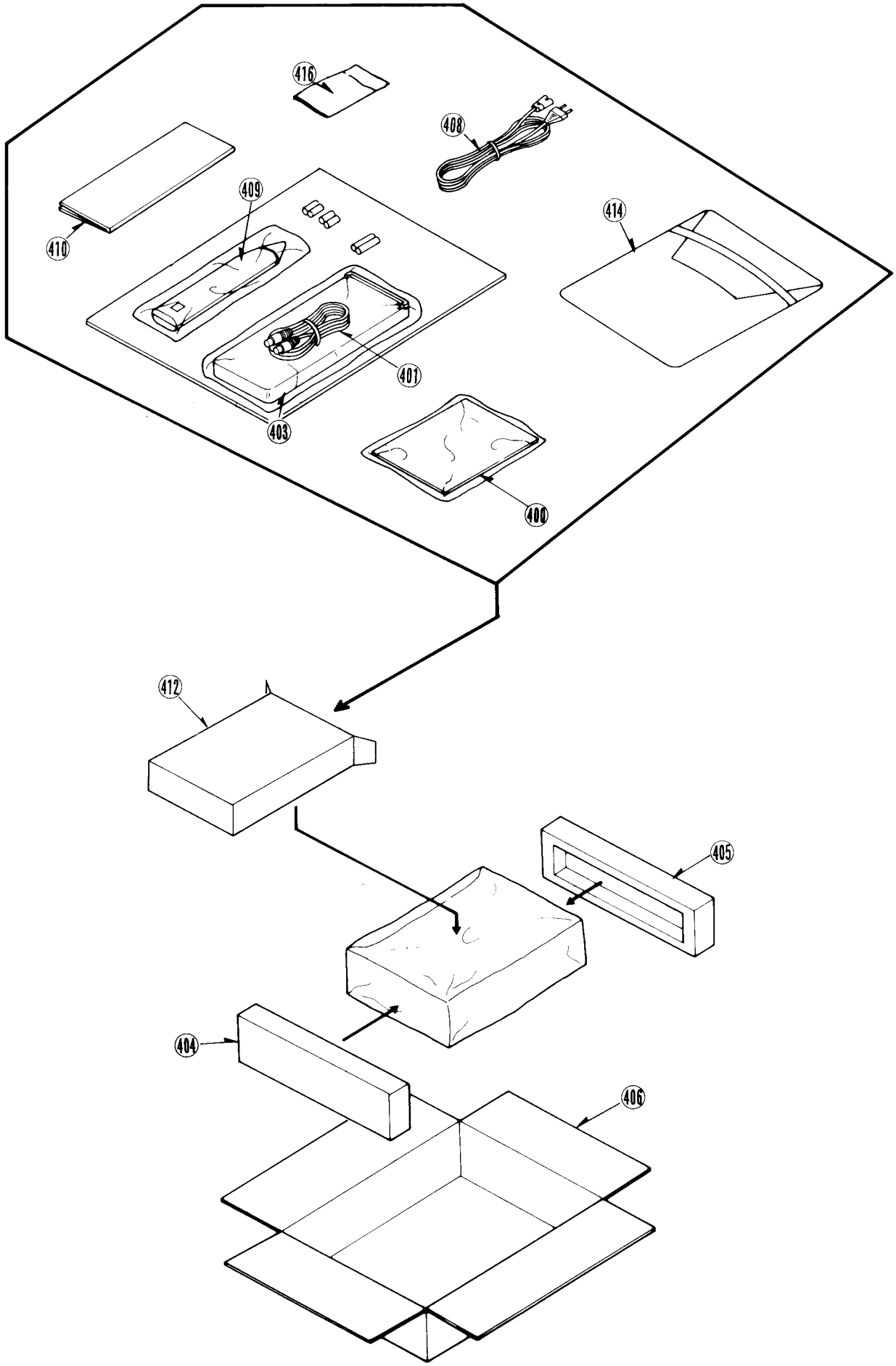

❻ REMOTE CONTROLLER UNIT

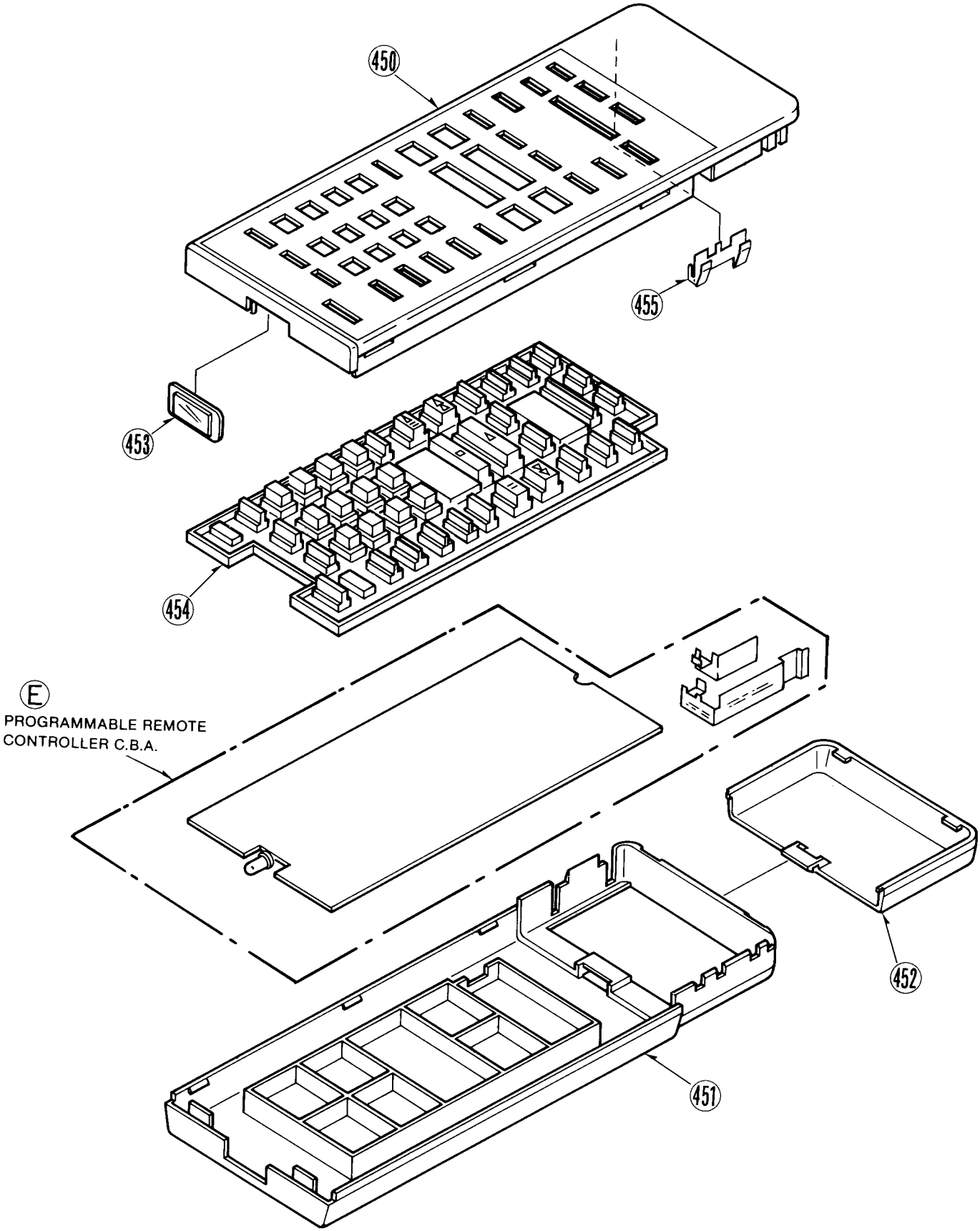

❼ DIGITAL SCANNER

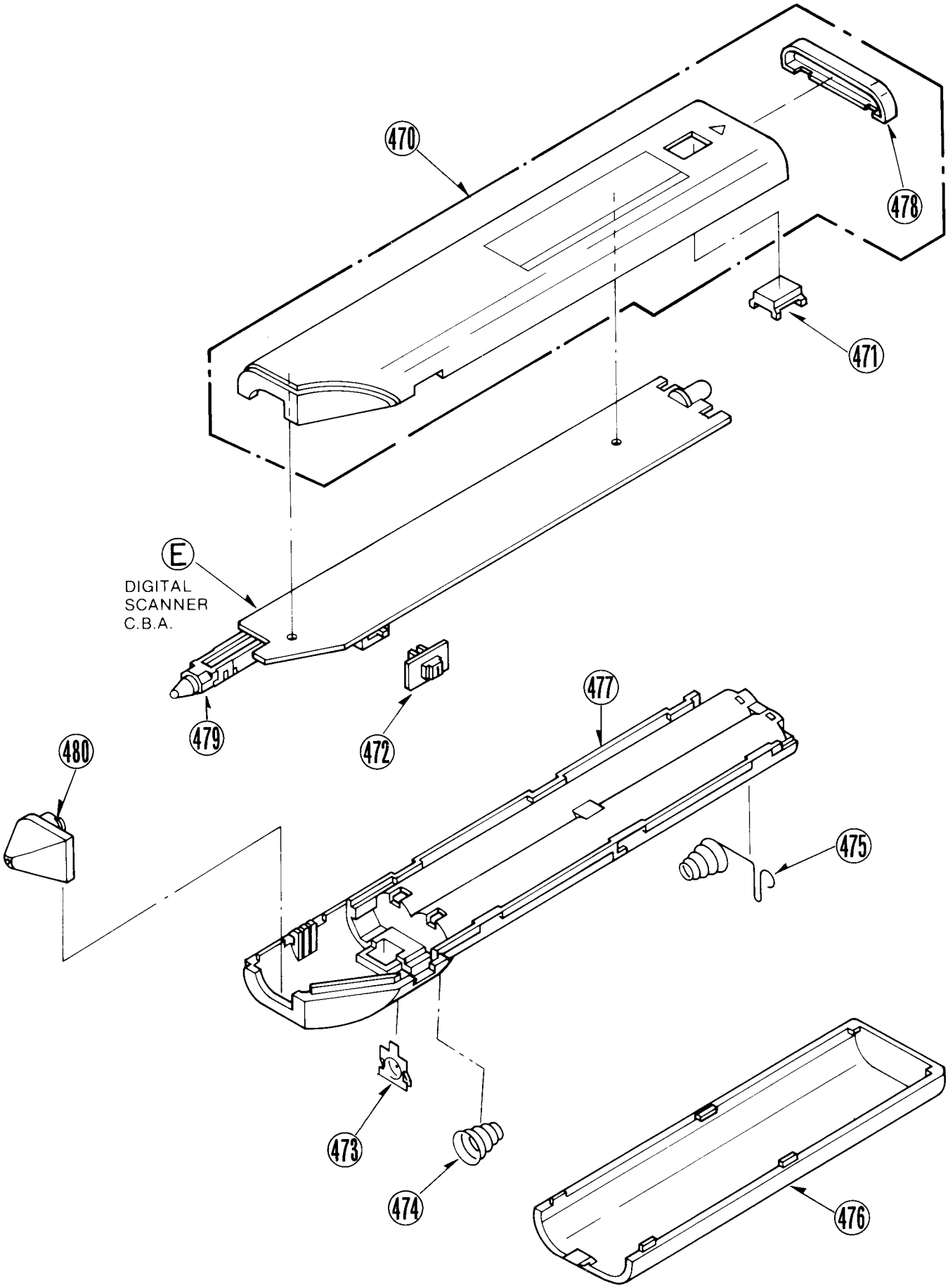

ORDER NO. VRD8802M119P
(Date of issue: FEB, 1988)

PARTS LIST

MODEL NO: NV-D48EG/B

1.NV-D48EG/B Mechanical Replacement Parts List

※This parts list is detachable from the manual.

Note:1.* Be sure to make your orders of replacement parts according to this list.
2.IMPORTANT SAFETY NOTICE
Components identified with the mark <!> have the special characteristics for safety. When replacing any of these components,use only the same type.

Ref.No.		Part No.	Part Name & Description	Pcs	Remarks
1(1)		VHD0141	HEAD AMP SET SCREW	2	
2(1)		VMA6897	HEAD AMP MOUNT ANGLE (L)	1	
3(1)		VMA6898	HEAD AMP MOUNT ANGLE (R)	1	
5(1)		VXS0073	EARTH PLATE UNIT	1	
6(1)		VEG0479	CYLINDER UNIT	1	<!>
7(1)		VEH0343	UPPER CYLINDER UNIT	1	
9(1)		VXA2703	MAIN HOLDER UNIT	1	
10(1)		VSC1806	CYLINDER C.B.A.SHIELD PLATE	1	
11(1)		VXL1495	TENSION ARM (1) UNIT	1	
12(1)		VMB1563	TENSION SPRING	1	
13(1)		VXZ0225	TENSION BAND UNIT	1	
14(1)		VXR0145	SUPPLY REEL TABLE UNIT	1	
15(1)		VMX1171	REEL WASHER (0.5mm)	2	
15(1)		VMX1239	REEL WASHER (0.3mm)	2	
15(1)		VMX1238	REEL WASHER (0.2mm)	2	
16(1)		VXL1496	TENSION RELEASE ARM(A)UNIT	1	
17(1)		VBS0038	FE HEAD	1	
18(1)		VXA2705	TENSION ARM BASE (1) UNIT	1	
19(1)		VMA6895	MOUNT ANGLE (L)	1	
20(1)		VMX1079	CUT WASHER	3	
21(1)		VXL1497	TENSION RELEASE ARM(B)UNIT	1	
22(1)		VMB1582	TENSION RELEASE SPRING	1	
23(1)		VES0350	SAFETY SW	1	
24(1)		VXZ0229	SUPPLY MAIN BRAKE UNIT	1	
25(1)		VXZ0228	SUPPLY SOFT BRAKE(1)UNIT	1	
26(1)		VMB1564	SUPPLY SOFT BRAKE SPRING	1	
27(1)		VXZ0231	TAKE UP MAIN BRAKE UNIT	1	
28(1)		VXZ0221	TAKE UP SOFT BRAKE UNIT	1	
29(1)		VMB1561	TAKE UP SOFT BRAKE SPRING	1	
30(1)		VMA6896	MOUNT ANGLE (R)	1	
31(1)		VHD0322	ADJUST SCREW	1	
32(1)		VMB1251	ADJUST SPRING	1	
33(1)		VHD0089B	AZIMUTH ADJUST SCREW	1	
34(1)		VBR0129	A/C HEAD	1	
35(1)		VHN0063	M4 NYLON NUT	1	
36(1)		VHN0050	ADJUST NUT	1	
37(1)		VXA2675	HEAD BASE UNIT	1	
38(1)		VMB1567	A/C HEAD SPRING	1	
39(1)		VXL1480	SUB LOADING ARM (1) UNIT	1	
40(1)		VMB1566	SUB POST SPRING	1	
41(1)		VXQ0006	THRUST SCREW UNIT	1	
42(1)		VHD0317	HOUSING SCREW	2	
43(1)		VMX1033	OIL SEAL	2	
44(1)		VMX1353	PINCH CAM CAP	1	
45(1)		VXL1743	PRESSURE ROLLER UNIT	1	
46(1)		VMB1568	PIN PRESSURE SPRING	1	
47(1)		VML1873	PINCH PRESSURE ARM	1	
48(1)		VMB1569	PINCH PRESSURE ARM RELEASE	1	
			SPRING		
49(1)		VML1874	PINCH LIFT ARM	1	
50(1)		VDG0357	P5 PULL OUT SECTOR GEAR	1	
51(1)		VDG0421	PINCH CAM	1	
52(1)		VHN0023	M3 NYLON NUT	1	
53(1)		VXL1485	P5 UNIT	1	
54(1)		VMB1554	P5 SPRING	1	
55(1)		VSS0175	MODE SW	1	
56(1)		VSC1851	SHIELD PLATE	1	
57(1)		VXP0863	ROLLER POST UNIT	1	
58(1)		VXA2729	INCLIND BASE (S)(1)UNIT	1	
59(1)		VHD0133	ROLLER POST SCREW	2	
60(1)		VMD0910	POST STOPPER	2	
61(1)		VXP0764A	ROLLER POST UNIT	1	
62(1)		VXA2686	INCLIND BASE(T)(1)UNIT	1	
63(1)		VXA2687	INCLIND ADJUST PLATE UNIT	1	
64(1)		VDG0483	PINCH SPEED DOWN GEAR	1	
65(1)		VDG0332	CONNECTION GEAR	1	
66(1)		VXA2693	SOLENOID	1	
67(1)		VXA2692	KICK ROD UNIT	1	
68(1)		VML1849	SOLENOID LEVER (1) UNIT	1	
69(1)		VMB1553	KICK ROD SPRING	1	
70(1)		VMB1565	MAIN BRAKE SPRING	1	
71(1)		VXR0146	TAKE UP REEL TABLE UNIT	1	
72(1)		VXD0101	HOUSING UNIT	1	
74(1)		VSC1843	HEAT SINK PLATE	1	
75(1)		VHD0329	HEAT SINK SCREW	1	
76(1)		VHD0374	HOUSING SCREW	1	
100(2)		VMX1079	CUT WASHER	9	
101(2)		VMB1583	TAKE UP SOFT BRAKE RELEASE	1	
			ARM SPRING		
102(2)		VMB1560	MAIN LEVER SPRING	1	
103(2)		VXA2701	MAIN LEVER (1) UNIT	1	
104(2)		VMM0160	SUB LEVER	1	
105(2)		VXL1500	SS BRAKE ARM UNIT	1	
106(2)		VMB1588	SS BRAKE SPRING	1	
107(2)		VXA2707	SS BRAKE BASE (1) UNIT	1	
108(2)		VXA2674	TENSION ROLLER UNIT	1	
109(2)		VXL1632	CAM FOLLOWER ARM UNIT	1	
110(2)		VML1861	DETENT ARM	1	
111(2)		VDG0346	MAIN CAM GEAR	1	
112(2)		VDG0343	SUB CAM GEAR	1	
113(2)		VDG0348	CENTRE GEAR	1	
114(2)		VDG0422	RETAINER GEAR	1	
115(2)		VDG0345	PLANET GEAR	3	
116(2)		VDG0349	CLUTCH DISK	1	
117(2)		VMB1558	CLUTCH SPRING	1	
118(2)		VDG0350	LOCK SLIDE GEAR	1	
119(2)		VDG0335	DRIVE DISK	1	
120(2)		VDG0342	RING GEAR	1	
121(2)		VMX0967	CUT WASHER	2	
122(2)		VML1859	CHANGE LEVER	1	
123(2)		VXA2672	RELEASE LEVER (1) UNIT	1	
124(2)		VMB1557	RELEASE SPRING	1	
125(2)		VML1860	RELEASE LEVER	1	
127(2)		VXP0923	TAKE UP REEL GEAR UNIT	1	
128(2)		VDG0445	SUPPLY REEL GEAR	1	
129(2)		VML1858	RETURN LEVER (R)	1	
130(2)		VML1857	RETURN LEVER (L)	1	
131(2)		VMD0913	STOPPER BASE	1	
132(2)		VDV0169	TIMING BELT	1	
133(2)		VXP0777	ROTOR UNIT	1	
134(2)		VMA6998	ROTOR STOPPER	1	
135(2)		VEK2944	STATOR UNIT	1	<!>
136(2)		VMA6847	SUB PLATE	1	
137(2)		VXP0917	CENTRE PULLEY UNIT	1	
138(2)		VDG0420	LOADING GEAR (T)	1	
139(2)		VMB1555	LOADING SPRING (T)	1	
140(2)		VXL1489	LOADING ARM (T)(1) UNIT	1	
141(2)		VXA3144	SECTOR GEAR UNIT	1	
142(2)		VDG0448	LOADING CAM GEAR	1	
143(2)		VDG0419	LOADING GEAR (S)	1	
144(2)		VML1855	PLAY CONTROL ARM	1	
145(2)		VXL1487	LOADING ARM (S)(1) UNIT	1	
146(2)		VDG0336	INTERMEDIATE GEAR	1	
147(2)		VXL1490	PLAY ARM UNIT	1	
148(2)		VBK0048	FG HEAD	1	
149(2)		VMB1746	LOADING SPRING(S)	1	
201(3)		VMA7223	TOP PLATE	1	
202(3)		VXA2679	CASSETTE HOLDER UNIT	1	
203(3)		VMB1573	MOUNT LEVER SPRING	1	
204(3)		VMD0919	HOLDER GUIDE (L)	1	
205(3)		VMM0163	MOUNT LEVER	1	
206(3)		VDP1077	ROLLER	2	
207(3)		VML1883	PRESSURE LEVER (L)	1	
208(3)		VMA6902	HOLDER ANGLE	1	
209(3)		VMA6901	CASSETTE HOLDER	1	
210(3)		VML1882	OPENER LEVER	1	
211(3)		VML1884	PRESSURE LEVER (R)	1	
212(3)		VMB1584	OPENER LEVER SPRING	1	
213(3)		VMD0920	HOLDER GUIDE (R)	1	
214(3)		VMB1576	RELEASE SPRING	1	
215(3)		VML1881	RELEASE LEVER	1	
216(3)		VXA2676	SIDE PLATE (L) UNIT	1	
217(3)		VMD0917	SIDE PLATE (L)	1	
218(3)		VML1880	OPENER LEVER	1	
219(3)		VXA3171	SIDE PLATE (R) UNIT	1	

To guarantee the FUNCTION,SAFETY and RELIABLITY of repaired units,only use ORIGINAL REPLACEMENT PARTS which are listed with their part numbers in this parts list section.

Ref.No.		Part No.	Part Name & Description	Pcs	Remarks
220(3)		VMD0918	SIDE PLATE (R)	1	
221(3)		VSS0176	SLIDE SW	1	
222(3)		VML1886	DOWN SUPPORT LEVER	1	
223(3)		VMB1575	DOWN SUPPORT SPRING	1	
224(3)		VXA3148	RACK (A)(1) UNIT	1	
225(3)		VMB1778	CLUTCH SPRING	1	
226(3)		VMB1772	LOCK SPRING	1	
227(3)		VML1885	LOCK LEVER	1	
228(3)		VXA3147	RACK (B) UNIT	1	
229(3)		VXP0851	MAIN SHAFT UNIT	1	
230(3)		VMB1570	SUB WIPER SPRING (L)	1	
231(3)		VML1878	SUB WIPER ARM	1	
232(3)		VML1879	SUB WIPER ARM (R)	1	
233(3)		VMB1571	SUB WIPER SPRING (R)	1	
234(3)		VMA6900	CASSETTE GUIDE	1	
235(3)		VKF1026	BLINDER PANEL	1	
236(3)		VMB1258	BLINDER SPRING	1	
237(3)		VMB1780	RACK (C) SPRING	1	
238(3)		VMA7237	CONNECTION ROD	1	
239(3)		VMB1779	CONNECTION ROD SPRING	1	
240(3)		VMA7224	CASSETTE HOLDER ANGLE	1	
300(4)		VYP2377	TOP PANEL UNIT	1	
301(4)		VHD0378	TOP PANEL SCREW	4	
302(4)		VKU0283	BOTTOM PLATE UNIT	1	
303(4)		VYP2331	FRONT PANEL UNIT	1	NV-D48EG
303(4)		VYP2332	FRONT PANEL UNIT	1	NV-D48B
304(4)		VYF1206	SUPPORT PANEL UNIT	1	
305(4)		VYC0274	DOOR ALUMINUM UNIT	1	
306(4)		VMC0376	EARTH SPRING	1	
307(4)		VES0457	KEY BOARD PANEL UNIT	1	NV-D48EG
307(4)		VES0458	KEY BOARD PANEL UNIT	1	NV-D48B
308(4)		VMT0212	CUSHION RUBBER	2	
309(4)		VGP1924	DOOR BACK PANEL	1	
310(4)		VDG0462	DAMPER GEAR	1	
311(4)		VMG0272	RF CONVERTER BUSHING	2	
313(4)		VXA3179	POWER SHIELD CASE(MAIN)	1	
314(4)		VSC2397	POWER SHIELD CASE(TOP)	1	
315(4)		VGH1476	NAME PLATE	1	
316(4)		VGQ1377	TR. HOLDER	1	
317(4)		VMZ1224	INSULATION SHEET	1	<!>
318(4)		VMZ1140	SW BARRIER(A)	1	
319(4)		VSC2237	POWER SHIELD CASE(BOTTOM)	1	
320(4)		VSC2238	HEAT SINK	1	
321(4)		VMC0357	HOLD SPRING(D1010)	1	
322(4)		VMC0364	HOLD SPRING(Q1002)	1	
323(4)		VKC0326	MAIN HINGE	2	
324(4)		VKC0328	TIMER HINGE(B)	1	
325(4)		VKC0334	TIMER HINGE(C)	1	
326(4)		VMP1127	TOP HOLDER ANGLE(R)	1	
327(4)		VMP1037	TOP HOLDER ANGLE(L)	3	
328(4)		VMP1567	MAIN C.B.A.EARTH ANGLE	1	
329(4)		VDG0437	DOOR GEAR	1	
330(4)		VMP1547	EARTH ANGLE	1	
331(4)		VKA0026	RUBBER FOOT	2	
332(4)		VHD0059	BOTTOM PLATE SCREW	8	
333(4)		VHD0141	MAIN C.B.A. SCREW	1	
334(4)		VSC2524	BCI SHIELD PLATE	1	NV-D48EG
335(4)		VMP1735	N-FTZ EARTH ANGLE	1	NV-D48EG
336(4)		VMC0395	DOOR HOLD SPRING	1	
400(5)		VQT2652	OPERATING INSTRUCTIONS	1	NV-D48EG<!>
			(ENGLISH/GERMAN/ITALIAN)		
400(5)		VQT2653	OPERATING INSTRUCTIONS	1	NV-D48B<!>
			(ENGLISH)		
400(5)		VQT2675	OPERATING INSTRUCTIONS	1	NV-D48B<!>
			(GREEK)		
401(5)		VJA0376	DIN RF CABLE	1	
403(5)		VEQ0709	REMOTE CONTROL UNIT	1	NV-D48EG
403(5)		VEQ0710	REMOTE CONTROL UNIT	1	NV-D48B
404(5)		VPN2120	CUSHION (L)	1	
405(5)		VPN2119	CUSHION (R)	1	
406(5)		VPG4053	PACKING CASE	1	NV-D48EG
406(5)		VPG4054	PACKING CASE	1	NV-D48B
408(5)		VJA0443	AC CORD	1	NV-D48EG<!>
408(5)		VJA0445	AC CORD	1	NV-D48B<!>
409(5)		VEQ0691	DIGITAL SCANNER	1	NV-D48EG

Ref.No.		Part No.	Part Name & Description	Pcs	Remarks
409(5)		VEQ0692	DIGITAL SCANNER	1	NV-D48B
410(5)		VQC1159	PROGRAMME SHEET	1	NV-D48EG
410(5)		VQC1186	PROGRAMME SHEET	1	NV-D48B
412(5)		VPK0834	ACCESSORIES PACKING CASE	1	
414(5)		VFC0115	DIGITAL SCANNER CASE	1	
416(5)		VQF2115	CLEANING BRUSH	1	
450(6)		VYK2012	TOP CASE UNIT	1	NV-D48EG
450(6)		VYK2013	TOP CASE UNIT	1	NV-D48B
451(6)		VKM1133	BOTTOM CASE	1	
452(6)		VKF0971	BATTERY COVER	1	
453(6)		VKW0878	IR WINDOW	1	
454(6)		VSP0356	RUBBER CONTACT	1	NV-D48EG
454(6)		VSP0355	RUBBER CONTACT	1	NV-D48B
455(6)		VJR0185	ELECTRODE (COMMON)	1	
470(7)		VYK1992	TOP CASE UNIT	1	NV-D48EG
470(7)		VYK1193	TOP CASE UNIT	1	NV-D48B
471(7)		VGU4099	TRANSMISSION BUTTON	1	
472(7)		VGU4100	POWER SW KNOB	1	
473(7)		VJR0411	ELECTRODE (+)	1	
474(7)		VJR0412	ELECTRODE (-)	1	
475(7)		VJR0272	ELECTRODE (COM)	1	
476(7)		VKF1024	BATTERY CASE	1	
477(7)		VKM1331	BOTTOM CASE	1	
478(7)		VKW0940	SMOKE FILTER	1	
479(7)		VSQ0567	SENSOR UNIT	1	
480(7)		VKM1332	SENSOR CAP	1	
			JIG		
		VFJ8125H3F	VHS-ALIGNMENT TAPE (PAL)	1	
		VFK0335	RETAINING RING REMOVER	1	
			(3mm/4mm)		
		VFK0387	TENSION POST ADJUSTMENT	1	
			PLATE		
		VFK0191	POST ADJUSTMENT PLATE	1	
		VFK0190	REEL TABLE HEIGHT GAUGE	1	
		VFK0328	H-POSITION ADJ.	1	
			SCREWDRIVER		
		VFK0329	POST ADJUSTMENT SCREWDRIVER	1	
		VFK62	FAN TYPE TENSION GAUGE	1	
		VFK0326	HEX WRENCH SET	1	
		VFK0132	BACK TENSION METER	1	
		VFK0343	CHECK LIGHT	1	
		VFK0344	HEIGHT ADJUSTMENT JIG	1	
		VFK27	HEAD CLEANING STICK	1	
		MOR265	MORLYTONE GREASE	1	
		VFK0283	SERVICE ALIGNMENT TOOL KIT	1	
		VFK0341	UPPER CYLINDER REMOVER	1	
		VEE4250	RF ADJUSTMENT CABLE (220mm)	1	

To guarantee the FUNCTION,SAFETY and RELIABLITY of repaired units,only use ORIGINAL REPLACEMENT PARTS which are listed with their part numbers in this parts list section.

2.NV-D48EG/B Electrical Replacement Parts List

Note:1.* Be sure to make your orders of replacement parts according to this list.
2.IMPORTANT SAFETY NOTICE
Components identified with the mark <!> have the special characteristics for safety. When replacing any of these components,use only the same type.
3.Unless otherwise specified,
All resistors are in OHMS ,K=1,000 OHMS. All capacitors are in MICROFARADS(uf),P=uuF.
4.The P.C.Board units marked width'■'show below the main assembled parts.
5.Printed circuit board assembly with mark(NLA) is no longer available after discontinuation of the product.

Ref.No.		Part No.	Part Name & Description	Pcs	Remarks
	■	VEP03493BE	MAIN C.B.A.	1	NV-D48EG<!>(NLA)
			(POWER,SERVO,LUMINANCE &		INCLUDING THE SUB
			CHROMINANCE,SYSTEM CONTROL,		MAIN PACK C.B.A.
			AUDIO)		(VEP02316C) WITH
					VISS PACK C.B.A.
					(VEP02315A),
					LUMINANCE &
					CHROMINANCE PACK
					C.B.A.(VEP03543C)
					WITH SECAM PACK
					C.B.A.(VEP03452B),
					TV DEMODULATOR
					C.B.A.(VEP07466A),
					VPS PACK C.B.A.
					(VEP07439A),INPUT
					SELECT PACK C.B.A.
					(VEP03494A).
	■	VEP03493BG	MAIN C.B.A.	1	NV-D48B<!>(NLA)
			(POWER,SERVO,LUMINANCE &		INCLUDING THE SUB
			CHROMINANCE,SYSTEM CONTROL,		MAIN PACK C.B.A.
			AUDIO)		(VEP02316A) WITH
					VISS PACK C.B.A.
					(VEP02315A),
					LUMINANCE &
					CHROMINANCE PACK
					C.B.A.(VEP03543D),
					TV DEMODULATOR
					C.B.A.(VEP07444E)
	■	VEP02316C	SUB MAIN PACK C.B.A.	1	NV-D48EG(NLA)
					INCLUDING THE VISS
					PACK C.B.A.
					(VEP02315A).
	■	VEP02316A	SUB MAIN PACK C.B.A.	1	NV-D48B(NLA)
					INCLUDING THE VISS
					PACK C.B.A.
					(VEP02315A)
	■	VEP02315A	VISS PACK C.B.A.	1	(NLA)
	■	VEP03543C	LUMINANCE & CHROMINANCE	1	NV-D48EG(NLA)
			PACK C.B.A.		INCLUDING THE SECAM
					PACK C.B.A.
					(VEP03452B).
	■	VEP03543D	LUMINANCE & CHROMINANCE	1	NV-D48B(NLA)
			PACK C.B.A.		
	■	VEP07466A	TV DEMODULATOR C.B.A.	1	NV-D48EG(NLA)
	■	VEP07444E	TV DEMODULATOR C.B.A.	1	NV-D48B(NLA)

Ref.No.		Part No.	Part Name & Description	Pcs	Remarks
	■	VEP05118B	HEAD AMP C.B.A.	1	(NLA)
	■	VEP06482B	OPERATION C.B.A.	1	NV-D48EG(NLA)
	■	VEP06482C	OPERATION C.B.A.	1	NV-D48B(NLA)
	■	VEP07450C	TIMER C.B.A.	1	NV-D48EG(NLA)
					INCLUDING THE IR
					RECEIVER C.B.A.
					(VEP06380E).
	■	VEP07450B	TIMER C.B.A.	1	NV-D48B(NLA)
					INCLUDING THE IR
					RECEIVER C.B.A.
					(VEP06380E).
	■	VEP06380E	IR RECEIVER C.B.A.	1	(NLA)
	■	VEP03528A	SUB DIGITAL C.B.A.	1	(NLA)
					INCLUDING THE MAIN
					DIGITAL C.B.A.
					(VEP03527A)
	■	VEP03527A	MAIN DIGITAL C.B.A.	1	(NLA)
	■	VEP01310H	POWER C.B.A.	1	NV-D48EG<!>(NLA)
					INCLUDING THE SUB
					POWER C.B.A.
					(VEP01311B)
	■	VEP01310J	POWER C.B.A.	1	NV-D48B<!>(NLA)
					INCLUDING THE SUB
					POWER C.B.A.
					(VEP01311B)
	■	VEP01311B	SUB POWER C.B.A.		(NLA)
	■	VEP66039C	DIGITAL SCANNER C.B.A.	1	NV-D48EG(NLA)
	■	VEP66039B	DIGITAL SCANNER C.B.A.		NV-D48B(NLA)
	■	VEP66030C	PROGRAMMABLE REMOTE	1	(NLA)
			CONTROLLER C.B.A.		
	■	VEK3583	MECHANISM CONNECTION C.B.A.	1	(NLA)
	■	VEK3555	REEL SENSOR C.B.A.	1	(NLA)
	■	VXA2689	LED C.B.A.	1	(NLA)
	■	VEK3577	PHOTO TR.(T) C.B.A.	1	(NLA)

To guarantee the FUNCTION,SAFETY and RELIABLITY of repaired units,only use ORIGINAL REPLACEMENT PARTS which are listed with their part numbers in this parts list section.

Ref.No.		Part No.	Part Name & Description	Pcs	Remarks
	■	VEK3578	PHOTO TR.(S) C.B.A.	1	(NLA)
F1001		XBA2C16TB0	FUSE 250V 1.6A	1	<!>
	■	VEP03493BE	MAIN C.B.A.		NV-D48EG<!>(NLA)
			CAPACITORS		
C301		ECEA1EKN2R2	E.CAPACITOR 25V 2.2U	1	
C302		ECEA0JK220	E.CAPACITOR 6.3V 22U	1	
C303		ECUX1E104ZFN	CHIP 25V 0.1U	1	
C304		ECEA0JU331	E.CAPACITOR 6.3V 330U	1	
C305		ECEA1CK100	E.CAPACITOR 16V 10U	1	
C306		ECEA1EK4R7	E.CAPACITOR 25V 4.7U	1	
C307		ECUM1H470JCN	CHIP 50V 47P	1	
C308		ECUM1H220JCN	CHIP 50V 22P	1	
C310		ECEA1CK100	E.CAPACITOR 16V 10U	1	
C311,12		ECUM1H180JCN	CHIP 50V 18P	2	
C313		ECEA1CK100	E.CAPACITOR 16V 10U	1	
C314		ECUM1H121JCN	CHIP 50V 120P	1	
C315		ECUM1H560JCN	CHIP 50V 56P	1	
C317		ECEA1AK470	E.CAPACITOR 10V 47U	1	
C319		ECUM1H471KBN	CHIP 50V 470P	1	
C320		ECUM1H270JCN	CHIP 50V 27P	1	
C321		ECEA1HK010	E.CAPACITOR 50V 1U	1	
C322		ECEA1HK2R2	E.CAPACITOR 50V 2.2U	1	
C324		ECEA1CK100	E.CAPACITOR 16V 10U	1	
C325,26		ECUM1H103ZFN	CHIP 50V 0.01U	2	
C327,28		ECEA1CK100	E.CAPACITOR 16V 10U	2	
C329		ECUM1H103ZFN	CHIP 50V 0.01U	1	
C331		ECUM1H103ZFN	CHIP 50V 0.01U	1	
C332		ECQV1H334JZ	P.CAPACITOR 50V 0.33U	1	
C333		ECEA1HK4R7	E.CAPACITOR 50V 4.7U	1	
C334		ECUM1H103ZFN	CHIP 50V 0.01U	1	
C335		ECUM1H680JCN	CHIP 50V 68P	1	
C336		ECUM1H101JCN	CHIP 50V 100P	1	
C337		ECUM1H270JCN	CHIP 50V 27P	1	
C338		ECUX1E104ZFN	CHIP 25V 0.1U	1	
C339		ECUM1H680JCN	CHIP 50V 68P	1	
C340		ECEA1EK4R7	E.CAPACITOR 25V 4.7U	1	
C349		ECUM1H470JCN	CHIP 50V 47P	1	
C351		ECCF1H220JC	C.CAPACITOR 50V 22P	1	
C352		ECQB1H562JH	P.CAPACITOR 50V 5600P	1	
C353		ECUM1H560JCN	CHIP 50V 56P	1	
C701		ECQV1H104JZ	P.CAPACITOR 50V 0.1U	1	
C702		ECEA1CK100	E.CAPACITOR 16V 10U	1	
C703		ECEA1HK2R2	E.CAPACITOR 50V 2.2U	1	
C705,06		ECEA1EKS4R7	E.CAPACITOR 25V 4.7U	2	
C707		ECEA1HKS010	E.CAPACITOR 50V 1U	1	
C708		ECEA1CKS100	E.CAPACITOR 16V 10U	1	
C710		ECUX1H103ZFN	CHIP 50V 0.01U	1	
C715-20		ECUX1H103ZFN	CHIP 50V 0.01U	6	
C721		ECEA1HKR27	E.CAPACITOR 50V 0.27U	1	
C722		ECUX1H103ZFN	CHIP 50V 0.01U	1	
C723		ECUX1H220JCN	CHIP 50V 22P	1	
C725		ECQV1H104JZ	P.CAPACITOR 50V 0.1U	1	
C727		ECUX1H080DCN	CHIP 50V 80P	1	
C728		ECUX1H103ZFN	CHIP 50V 0.01U	1	
C730		ECEA1CK100	E.CAPACITOR 16V 10U	1	
C731		ECEA1CKS100	E.CAPACITOR 16V 10U	1	
C732		ECQV1H224B	M.CAPACITOR 50V 0.22U	1	
C734		ECUX1H103ZFN	CHIP 50V 0.01U	1	
C735		ECUX1H070DCN	CHIP 50V 7P	1	
C736		ECQB1H103JH	P.CAPACITOR 50V 0.01U	1	
C737		ECUX1H151JCN	CHIP 50V 150P	1	
C739		ECEA1HK010	E.CAPACITOR 50V 1U	1	

Ref.No.		Part No.	Part Name & Description	Pcs	Remarks
C740		ECUX1H103ZFN	CHIP 50V 0.01U	1	
C741		ECEA1CK100	E.CAPACITOR 16V 10U	1	
C742		ECUX1H030CCN	CHIP 50V 3P	1	
C743		ECUM1H270RSN	CHIP 50V 27P	1	
C744		ECEA1HKR47	E.CAPACITOR 50V 0.47U	1	
C745		ECUX1H680JPN	CHIP 50V 68P	1	
C746		ECUX1H150JCN	CHIP 50V 15P	1	
C747		ECUX1H103ZFN	CHIP 50V 0.01U	1	
C748		ECEA1CK330	E.CAPACITOR 16V 33U	1	
C749		ECEA1CK100	E.CAPACITOR 16V 10U	1	
C760		ECQV1H473JZ	P.CAPACITOR 50V 0.047U	1	
C775		ECUM1H120JCN	C.CAPACITOR CH 50V 12P	1	
C781		ECUX1H220JCN	CHIP 50V 22P	1	
C782		ECUM1H060DCN	CHIP 50V 6P	1	
C783		ECQV1H104JZ	P.CAPACITOR 50V 0.1U	1	
C787		ECEA1EKS4R7	E.CAPACITOR 25V 4.7U	1	
C801		ECUM1H103ZFN	CHIP 50V 0.01U	1	
C814		ECEA1AK101	E.CAPACITOR 10V 100U	1	
C815		ECQV1H154JZ	P.CAPACITOR 50V 0.15U	1	
C816		ECUX1E104ZFN	CHIP 25V 0.1U	1	
C817		ECQV1H274JZ	P.CAPACITOR 50V 0.27U	1	
C818		ECUM1H471KBN	CHIP 50V 470P	1	
C819		ECUM1H820JCN	CHIP 50V 82P	1	
C820		ECEA1HK2R2	E.CAPACITOR 50V 2.2U	1	
C821		ECEA1HFS4R7	E.CAPACITOR 50V 4.7U	1	
C823		ECEA1HK2R2	E.CAPACITOR 50V 2.2U	1	
C824		ECEA1HK010	E.CAPACITOR 50V 1U	1	
C825		ECUM1H101JCN	CHIP 50V 100P	1	
C826		ECEA1AU221	E.CAPACITOR 10V 220U	1	
C827		ECUM1H050CCN	CHIP 50V 5P	1	
C828		ECUM1H102KBN	CHIP 50V 1000P	1	
C829		ECQV1H474JZ	P.CAPACITOR 50V 0.47U	1	
C830		ECEA1EK4R7	E.CAPACITOR 25V 4.7U	1	
C831,32		ECUX1E104ZFN	CHIP 25V 0.1U	2	
C851		ECKF1H103ZF	C.CAPACITOR 50V 0.01U	1	
C852		ECEA1CK330	E.CAPACITOR 16V 33U	1	
C853		ECEA10Z47	E.CAPACITOR 10V 47U	1	
C854		ECQV1H563JZ	P.CAPACITOR 50V 0.056U	1	
C855		ECEA1CK330	E.CAPACITOR 16V 33U	1	
C856		ECKF1H103ZF	C.CAPACITOR 50V 0.01U	1	
C858		ECKF1H681KB	C.CAPACITOR 50V 680P	1	
C1101		ECEA1EK100	E.CAPACITOR 25V 10U	1	
C1103		ECEA0JK101	E.CAPACITOR 6.3V 100U	1	
C2022		ECEA1CK100	E.CAPACITOR 16V 10U	1	
C2023		ECEA1HKR47	E.CAPACITOR 50V 0.47U	1	
C2024		ECUM1H182KBN	CHIP 50V 1800P	1	
C2026		ECQB1H333JH	P.CAPACITOR 50V 0.033U	1	
C2027		ECEA0JK470	E.CAPACITOR 6.3V 47U	1	
C2104		ECEA1CKN100	E.CAPACITOR 16V 10U	1	
C2105		VCYD1C473MR1	S.CAPACITOR 16V 0.047U	1	
C2106		ECEA1CK100	E.CAPACITOR 16V 10U	1	
C2107		ECEA1HKN010	E.CAPACITOR 50V 1U	1	
C2108		ECEA1CK100	E.CAPACITOR 16V 10U	1	
C2109		ECEA1HKN010	E.CAPACITOR 50V 1U	1	
C2110		ECEA0JK330	E.CAPACITOR 6.3V 33U	1	
C2112		VCYD1C104MR1	S.CAPACITOR 16V 0.1U	1	
C2113		ECQV1H683JZ	P.CAPACITOR 50V 0.068U	1	
C2114		ECUM1H102KBN	CHIP 50V 1000P	1	
C2115		ECEA1HKNR33	E.CAPACITOR 50V 0.33U	1	
C2116		VCYD1C104MR1	S.CAPACITOR 16V 0.1U	1	
C2117		ECEA1HKR47	E.CAPACITOR 50V 0.47U	1	
C2118		ECUM1H472KBN	CHIP 50V 4700P	1	
C2119		ECQV1H334JZ	P.CAPACITOR 50V 0.33U	1	
C2120		ECUM1H103ZFN	CHIP 50V 0.01U	1	
C2121		VCYD1C104MR1	S.CAPACITOR 16V 0.1U	1	
C2122		ECUM1H562KBN	CHIP 50V 5600P	1	
C2123		VCYD1E223KR	S.CAPACITOR 25V 0.022U	1	
C2124,25		ECEA0JK470	E.CAPACITOR 6.3V 47U	2	
C2126		ECUM1H102KBN	CHIP 50V 1000P	1	
C2127		ECUM1H332KBN	CHIP 50V 3300P	1	
C2129		ECQB1H272JH	P.CAPACITOR 50V 2700P	1	
C2130		ECEA1CKN100	E.CAPACITOR 16V 10U	1	
C2131		ECEA1HK010	E.CAPACITOR 50V 1U	1	
C2132		ECEA1CK100	E.CAPACITOR 16V 10U	1	
C2134		ECUM1H102KBN	CHIP 50V 1000P	1	

To guarantee the FUNCTION,SAFETY and RELIABLITY of repaired units,only use ORIGINAL REPLACEMENT PARTS which are listed with their part numbers in this parts list section.

Ref.No.		Part No.	Part Name & Description	Pcs	Remarks
C2137		ECUM1H562KBN	CHIP 50V 5600P	1	
C2138		ECEA0JK101	E.CAPACITOR 6.3V 100U	1	
C2139		ECEA0JK221	E.CAPACITOR 6.3V 220U	1	
C2140		ECEA1CK100	E.CAPACITOR 16V 10U	1	
C2141		ECEA0JK470	E.CAPACITOR 6.3V 47U	1	
C2142,43		ECUM1H103ZFN	CHIP 50V 0.01U	2	
C2146		VCYD1C104MR1	S.CAPACITOR 16V 0.1U	1	
C2147		ECEA1CK100	E.CAPACITOR 16V 10U	1	
C2148		ECUM1H102KBN	CHIP 50V 1000P	1	
C2155		ECEA0JK101	E.CAPACITOR 6.3V 100U	1	
C2156		ECUM1H103ZFN	CHIP 50V 0.01U	1	
C2158		ECUM1E103KBN	CHIP 25V 0.01U	1	
C2172		ECEA1EK3R3	E.CAPACITOR 25V 3.3U	1	
C2174		ECUM1H102KBN	CHIP 50V 1000P	1	
C2175		ECUM1E103KBN	CHIP 25V 0.01U	1	
C2176		ECQV1H154JZ	P.CAPACITOR 50V 0.15U	1	
C2177		ECEA0JK470	E.CAPACITOR 6.3V 47U	1	
C2178		ECEA1HKR22	E.CAPACITOR 50V 0.22U	1	
C2179		ECUM1E103KBN	CHIP 25V 0.01U	1	
C2181,82		ECEA0JK470	E.CAPACITOR 6.3V 47U	2	
C2184,85		ECUM1H332KBN	CHIP 50V 3300P	2	
C2187		ECQV1H104JZ	P.CAPACITOR 50V 0.1U	1	
C2191,92		ECQV1H104JZ	P.CAPACITOR 50V 0.1U	2	
C2501-03		ECQB1H333JH	P.CAPACITOR 50V 0.033U	3	
C2504-06		ECEA1HK2R2	E.CAPACITOR 50V 2.2U	3	
C2507		ECQB1H223JH	P.CAPACITOR 50V 0.022U	1	
C2508		ECQV1H104JZ	P.CAPACITOR 50V 0.1U	1	
C2511		ECEA1CK101	E.CAPACITOR 16V 100U	1	
C2512-14		ECUM1H332KBN	CHIP 50V 3300P	3	
C2517		ECEA1CK470	E.CAPACITOR 16V 47U	1	
C2519		ECEA25Z47	E.CAPACITOR 25V 4.7U	1	
C2524		ECQV1H274JZ	P.CAPACITOR 50V 0.27U	1	
C2801		ECEA1HK010	E.CAPACITOR 50V 1U	1	
C2802		VCYD1E223KR	S.CAPACITOR 25V 0.022U	1	
C2803		ECEA0JK470	E.CAPACITOR 6.3V 47U	1	
C2804		ECUM1H181KN	CHIP 50V 180P	1	
C2805		ECEA1HKN010	E.CAPACITOR 50V 1U	1	
C2806		ECUM1H220JCN	CHIP 50V 22P	1	
C2807		ECEA0JK470	E.CAPACITOR 6.3V 47U	1	
C2808		ECQV1H124JZ	P.CAPACITOR 50V 0.12U	1	
C2809		ECEA1EK4R7	E.CAPACITOR 25V 4.7U	1	
C2812,13		ECQV1H224JZ	P.CAPACITOR 50V 0.22U	2	
C2918		ECQV1H104JZ	P.CAPACITOR 50V 0.1U	1	
C3001		ECEA1CK470	E.CAPACITOR 16V 47U	1	
C3002		ECEA0JU471	E.CAPACITOR 6.3V 470U	1	
C3003,04		ECUM1H332KBN	CHIP 50V 3300P	2	
C3007		ECEA1CK100	E.CAPACITOR 16V 10U	1	
C3010		ECUM1H151JCN	CHIP 50V 150P	1	
C3011		ECUM1H270JCN	CHIP 50V 27P	1	
C3012		ECUM1H681JN	CHIP 50V 680P	1	
C3013		ECEA1HKN010	E.CAPACITOR 50V 1U	1	
C3014		ECUM1H150JCN	CHIP 50V 15P	1	
C3015		VCYD1C104MR1	S.CAPACITOR 16V 0.1U	1	
C3016		ECEA0JK470	E.CAPACITOR 6.3V 47U	1	
C3019		ECUM1H220JCN	CHIP 50V 22P	1	
C3050		ECEA1CK100	E.CAPACITOR 16V 10U	1	
C3051		ECEA1CK470	E.CAPACITOR 16V 47U	1	
C3053		ECEA0JK101	E.CAPACITOR 6.3V 100U	1	
C3054		ECEA0JK470	E.CAPACITOR 6.3V 47U	1	
C3055		ECEA1CK330	E.CAPACITOR 16V 33U	1	
C3056		ECEA1CK470	E.CAPACITOR 16V 47U	1	
C3057		ECQB1H103JH	P.CAPACITOR 50V 0.01U	1	
C3058		ECQB1H392JH	P.CAPACITOR 50V 3900P	1	
C3059		ECQB1H562JH	P.CAPACITOR 50V 5600P	1	
C3060		ECUM1H103ZFN	CHIP 50V 0.01U	1	
C3061		ECQB1H272JH	P.CAPACITOR 50V 2700P	1	
C3062,63		ECEA1HK010	E.CAPACITOR 50V 1U	2	
C3064		ECQB1H103JH	P.CAPACITOR 50V 0.01U	1	
C3067,68		ECUM1H103ZFN	CHIP 50V 0.01U	2	
C3070		ECUM1H103ZFN	CHIP 50V 0.01U	1	
C3072		ECKF1H101KB	C.CAPACITOR 50V 100P	1	
C3073		ECCF1H390JC	C.CAPACITOR 50V 39P	1	
C3075		ECQV1H104JZ	P.CAPACITOR 50V 0.1U	1	
C3077		ECQV1H104JZ	P.CAPACITOR 50V 0.1U	1	
C3801,02		ECEA1CK220	E.CAPACITOR 16V 22U	2	

Ref.No.		Part No.	Part Name & Description	Pcs	Remarks
C3803		ECEA1CK470	E.CAPACITOR 16V 47U	1	
C3804		ECEA1HK2R2	E.CAPACITOR 50V 2.2U	1	
C3805,06		ECEA1CK470	E.CAPACITOR 16V 47U	2	
C3807		ECKF1H102KB	C.CAPACITOR 50V 1000P	1	
C3808		ECEA0JK470	E.CAPACITOR 6.3V 47U	1	
C3809		ECEA1HK2R2	E.CAPACITOR 50V 2.2U	1	
C3810		ECEA1HK3R3	E.CAPACITOR 50V 3.3U	1	
C3811		ECEA1HK2R2	E.CAPACITOR 50V 2.2U	1	
C3812		ECEA1CK330	E.CAPACITOR 16V 33U	1	
C3813		VCYD1C104MR1	S.CAPACITOR 16V 0.1U	1	
C3814,15		ECEA1CK100	E.CAPACITOR 16V 10U	2	
C3816		ECKF1H121KB	C.CAPACITOR 50V 120P	1	
C3817		ECEA1HK010	E.CAPACITOR 50V 1U	1	
C3818		ECKF1H102KB	C.CAPACITOR 50V 1000P	1	
C3819		ECEA1HK010	E.CAPACITOR 50V 1U	1	
C3821		ECKF1H471KB	C.CAPACITOR 50V 470P	1	
C3822		VCYD1E103KR	S.CAPACITOR 25V 0.01U	1	
C3823		ECKF1H102KB	C.CAPACITOR 50V 1000P	1	
C3824		ECEA0JK221	E.CAPACITOR 6.3V 220U	1	
C3825		ECCF1H100DC	C.CAPACITOR 50V 10P	1	
C3826		ECEA0JK221	E.CAPACITOR 6.3V 220U	1	
C3827		ECCF1H050CC	C.CAPACITOR 50V 5P	1	
C4001		ECQB1H153JH	P.CAPACITOR 50V 0.015U	1	
C4002		ECEA16Z33	E.CAPACITOR 16V 33U	1	
C4003		ECKF1H102ZF	C.CAPACITOR 50V 1000P	1	
C4004		ECQP1332JZ	M.CAPACITOR 100V 3300P	1	
C4005		ECCD2H121K	C.CAPACITOR 500V 120P	1	
C4006		ECEA1CK470	E.CAPACITOR 16V 47U	1	
C4007		ECEA1CK330	E.CAPACITOR 16V 33U	1	
C4008		ECEA1HK010	E.CAPACITOR 50V 1U	1	
C4009		ECEA1EK4R7	E.CAPACITOR 25V 4.7U	1	
C4011		ECQB1H123JH	P.CAPACITOR 50V 0.012U	1	
C4012		ECEA1CK100	E.CAPACITOR 16V 10U	1	
C4013		ECUM1H471KBN	CHIP 50V 470P	1	
C4015		ECEA1CKL100	E.CAPACITOR 16V 10U	1	
C4016		ECUM1H102KBN	CHIP 50V 1000P	1	
C4017		ECEA16M10	ELECTROLYTIC 16V 10U	1	
C4018		ECQB1H123JH	P.CAPACITOR 50V 0.012U	1	
C4019		ECEA1CK100	E.CAPACITOR 16V 10U	1	
C4020		ECUM1H102KBN	CHIP 50V 1000P	1	
C4021		ECEA1AK470	E.CAPACITOR 10V 47U	1	
C4022		ECUM1H102KBN	CHIP 50V 1000P	1	
C4023		ECUX1H221JCN	CHIP 50V 220P	1	
C4024,25		ECUM1H101JCN	CHIP 50V 100P	2	
C4032		VCYD1C104MR1	S.CAPACITOR 16V 0.1U	1	
C4038		ECEA1CK100	E.CAPACITOR 16V 10U	1	
C6001		ECEA0JK220	E.CAPACITOR 6.3V 22U	1	
C6002		VCYD1C103MR1	S.CAPACITOR 16V 0.01U	1	
C6003		ECUM1H103ZFN	CHIP 50V 0.01U	1	
C6006		ECEA0JK330	E.CAPACITOR 6.3V 33U	1	
C6007		VCYD1C104MR1	S.CAPACITOR 16V 0.1U	1	
C6013		ECEA1CK330	E.CAPACITOR 16V 33U	1	
C6017-19		ECEA0JK470	E.CAPACITOR 6.3V 47U	3	
C6020		ECUM1H103KBN	CHIP 50V 0.01U	1	
C6023		ECUM1H103ZFN	CHIP 50V 0.01U	1	
C6024-26		ECUM1H271KBN	CHIP 50V 270P	3	
C6027		ECEA1HKR47	E.CAPACITOR 50V 0.47U	1	
C6028		ECUM1H102KBN	CHIP 50V 1000P	1	
C6029		ECUM1H103ZFN	CHIP 50V 0.01U	1	
C7551		ECQV1H104JZ	P.CAPACITOR 50V 0.1U	1	
C7552		ECQV1H683JZ	P.CAPACITOR 50V 0.068U	1	
C7553		ECQV1H823JZ	P.CAPACITOR 50V 0.082U	1	
C7554		ECQB1H273JH	P.CAPACITOR 50V 0.027U	1	
C7555,56		ECUM1H103ZFN	CHIP 50V 0.01U	2	
C7557		ECEA1HKA100	E.CAPACITOR 50V 10U	1	
C7558		ECUM1H103ZFN	CHIP 50V 0.01U	1	
C7559		ECEA1CK100	E.CAPACITOR 16V 10U	1	
C7560-63		ECUM1H103ZFN	CHIP 50V 0.01U	4	
C7564		ECEA1HKN010	E.CAPACITOR 50V 1U	1	
C7565		ECUM1H103ZFN	CHIP 50V 0.01U	1	
C7569		ECEA1HKN010	E.CAPACITOR 50V 1U	1	
C7571		EECS5R5V473	E.CAPACITOR 5.5V 0.047	1	
C7590		ECEA0JU221	E.CAPACITOR 6.3V 220U	1	
C7591		ECUM1H102KBN	CHIP 50V 1000P	1	
C7592		ECUM1H560JCN	CHIP 50V 56P	1	

To guarantee the FUNCTION,SAFETY and RELIABLITY of repaired units,only use ORIGINAL REPLACEMENT PARTS which are listed with their part numbers in this parts list section.

Ref.No.		Part No.	Part Name & Description	Pcs	Remarks
C7593,94		ECQV1H104JZ	P.CAPACITOR 50V 0.1U	2	
C7801		ECEA1CK220	E.CAPACITOR 16V 22U	1	
C7802		ECQB1H223JH	P.CAPACITOR 50V 0.022U	1	
C7803		ECQV1H683JZ	P.CAPACITOR 50V 0.068U	1	
C7804		ECEA1HKNR47	E.CAPACITOR 50V 0.47U	1	
C7805		ECCF1H150JC	C.CAPACITOR 50V 15P	1	
C7806		ECQB1H102JH	P.CAPACITOR 50V 1000P	1	
C7807		ECKF1H471KB	C.CAPACITOR 50V 470P	1	
C7808		ECQB1H223JH	P.CAPACITOR 50V 0.022U	1	
C7809		ECKF1H271KB	C.CAPACITOR 50V 270P	1	
C7810		ECCF1H101JC	C.CAPACITOR 50V 100P	1	
C7811		ECCF1H180JC	C.CAPACITOR 50V 18P	1	
C7812		ECCF1H820JC	C.CAPACITOR 50V 82P	1	
C7814		ECKF1H102KB	C.CAPACITOR 50V 1000P	1	
C7815		VCYD1C104MR1	S.CAPACITOR 16V 0.1U	1	
C7816		ECEA1EK4R7	E.CAPACITOR 25V 4.7U	1	
C7818		ECEA1CKN100	E.CAPACITOR 16V 10U	1	
C7819,20		ECCF1H101JC	C.CAPACITOR 50V 100P	2	
C7821		ECQB1H272JH	P.CAPACITOR 50V 2700P	1	
C7851		ECQV1H104JZ	P.CAPACITOR 50V 0.1U	1	
C7852		ECEA1AK101	E.CAPACITOR 10V 100U	1	
C7853,54		ECCF1H330JC	C.CAPACITOR 50V 33P	2	
C7855,56		ECEA1HK010	E.CAPACITOR 50V 1U	2	
C7860		ECEA0JK101	E.CAPACITOR 6.3V 100U	1	
			DIODES		
D301		MA4091M	DIODE	1	
D710		MA3100L	DIODE	1	
D712		MA28W	DIODE	1	
D771		MA151WK	DIODE	1	
D1101		MA165	DIODE	1	
D2007		MA165	DIODE	1	
D2014		MA165	DIODE	1	
D2101-05		MA165	DIODE	5	
D2801-04		MA165	DIODE	4	
D3008,09		MA165	DIODE	2	
D3011		MA165	DIODE	1	
D3801		MA165	DIODE	1	
D4001		MA165	DIODE	1	
D4050		MA165	DIODE	1	
D6001		ERA15-01	DIODE	1	
D6002		MA165	DIODE	1	
D6004		MA165	DIODE	1	
D6017		ERA15-01	DIODE	1	
D6019		MA4150M	DIODE	1	
D6023,24		MA165	DIODE	2	
D6028,29		MA165	DIODE	2	
D6030		MA4056L	DIODE	1	
D6032		MA165	DIODE	1	
D7551-53		MA165	DIODE	3	
D7851		MA165	DIODE	1	
			DELAY		
DL802		VLD0148	DELAY	1	
			FILTERS		
FL301		ELB4M022	FILTER	1	
FL302		VLF0499	FILTER	1	
FL303		VLF0567	FILTER	1	
FL801		VLF0299	FILTER	1	
FL851		VLF0143	FILTER	1	
FL3001		VLF0413	FILTER	1	
			ICS		
IC301		VEFH03D	HIC	1	
IC303		MSM6965-3RS	IC	1	
IC701		M51366SP	IC	1	
IC801		VEFH04A	HIC	1	
IC851		BA7025L	IC	1	
IC2101		UPD6160CA606	IC	1	
IC2102		MN15312VPL	IC	1	

Ref.No.		Part No.	Part Name & Description	Pcs	Remarks
IC2103,04		AN6562	IC	2	
IC2105		UPD4069UBC	IC	1	
IC2501		BA6432S	IC	1	
IC2801		BA6305	IC	1	
IC2802		MC14013BCP	IC	1	
IC2803		LM393P	IC	1	
IC3001		BA7004	IC	1	
IC3002		AN5421N	IC	1	
IC3801		M5202AP	IC	1	
IC3802		AN6552	IC	1	
IC4001		BA7766S	IC	1	
IC6001		MN15362VPD	IC	1	
IC6002		AN6914	IC	1	
IC6003		MN4510B	IC	1	
IC6004		MN12821	IC	1	(R)
IC7551		AN5043	IC	1	
IC7552		AN6913	IC	1	
IC7553		MN4066B	IC	1	
IC7801		SAA5235	IC	1	
IC7802		SAF1135P	IC	1	
IC7851		MN158412VNL	IC	1	
IC7852		MN1280	IC	1	
			COILS		
L301		VLQEL05F101K	COIL 100UH	1	
L302		VLQEL05F220K	COIL 22UH	1	
L303,04		VLQEL05F101K	COIL 100UH	2	
L306		VLQEL05F101K	COIL 100UH	1	
L307		VLQEL05F151K	COIL 150UH	1	
L308		VLQEL05F270K	COIL 27UH	1	
L309,10		VLQEL05F101K	COIL 100UH	2	
L311		VLQEL05F2R2K	COIL 2.2UH	1	
L701,02		ELESP680KA	COIL 68UH	2	
L703,04		VLQEL05F221K	COIL 220UH	2	
L712		VLQ0305J1R2	COIL 1.2UH	1	
L714		VLQ0305J1R2	COIL 1.2UH	1	
L715		VLQ0213K680	COIL 68UH	1	
L716		VLQEL05F560K	COIL 56UH	1	
L717,18		ELESP680KA	COIL 68UH	2	
L719		ELESP120KA	COIL 12UH	1	
L781		ELESP680KA	COIL 68UH	1	
L804		VLQEL05F150K	COIL 15UH	1	
L805		VLQEL05F101K	COIL 100UH	1	
L806		VLQEL05F681K	COIL 680UH	1	
L808		VLQEL05F470K	COIL 47UH	1	
L809		VLQEL05F331K	COIL 330UH	1	
L810		VLQEL05F101K	COIL 100UH	1	
L811		VLQEL05F470K	COIL 47UH	1	
L812		VLQEL05F681K	COIL 680UH	1	
L851		VLQEL05F101K	COIL 100UH	1	
L2501		VLQEL05F102K	COIL 1000UH	1	
L2502		VLQ0128	COIL 47UH	1	
L3001-03		VLQEL05F101K	COIL 100UH	3	
L3005		VLQEL05F120K	COIL 12UH	1	
L3006		VLQEL05F5R6K	COIL 5.6UH	1	
L3007		VLQEL05F101K	COIL 100UH	1	
L3008		VLQEL05F3R3K	COIL 3.3UH	1	
L3012		VLQEL05F101K	COIL 100UH	1	
L3013		VLQEL05F390K	COIL 39UH	1	
L3014		VLQEL05F470K	COIL 47UH	1	
L3801		VLQEL05F101K	COIL 100UH	1	
L3802		VLQEL05F1R0K	COIL 1UH	1	
L3803		VLQEL06F471K	COIL 470UH	1	
L3804		VLQEL05F2R7K	COIL 2.7UH	1	
L3805,06		VLQEL05F1R0K	COIL 1UH	2	
L4001		VLQEL07F822J	COIL 8200UH	1	
L4002		VLQEL05F471K	COIL 470UH	1	
L7551		VLQEL05F680K	COIL 68UH	1	
L7801		VLQ0193	COIL	1	
L7802,03		VLQEL05F101K	COIL 100UH	2	
			CONNECTORS		
P006		VJS1902	CONNECTOR (FEMALE)	1	

To guarantee the FUNCTION,SAFETY and RELIABLITY of repaired units,only use ORIGINAL REPLACEMENT PARTS which are listed with their part numbers in this parts list section.

Ref.No.		Part No.	Part Name & Description	Pcs	Remarks
P501		VJF0171T	CONNECTOR	1	
P1001		VJS1931T	CONNECTOR (FEMALE)	1	
P1101		VJP1931T	CONNECTOR (MALE)	1	
P2001		VJP1232T	CONNECTOR(MALE) 5P	1	
P2002		VJP1932T	CONNECTOR (MALE)	1	
P2801		VJP1244T	CONNECTOR(MALE) 4P	1	
P2901		VJS1232T	CONNECTOR (FEMALE)	1	
P3001		VJP1393T	CONNECTOR(MALE) 13P	1	
P3002		VJP1237T	CONNECTOR(MALE) 10P	1	
P4001		VJP1233T	CONNECTOR(MALE) 6P	1	
P6001		VJS2157W	CONNECTOR (FEMALE)	1	
P6002		VJS2149W	CONNECTOR (FEMALE)	1	
P6003		VJP1236T	CONNECTOR(MALE) 9P	1	
P6004		VJP1231T	CONNECTOR(MALE) 4P	1	
P6005		VJP1231T	CONNECTOR(MALE) 4P	1	
P6202		VJS1236T	CONNECTOR (FEMALE)	1	
P7401		VJS1475	CONNECTOR(FEMALE)	1	
P7402		VJS2157W	CONNECTOR (FEMALE)	1	
P9501		VJS1237T	CONNECTOR	1	
P9502		VJS1231T	CONNECTOR (FEMALE)	1	
			TRANSISTORS		
Q301		2SB709	TRANSISTOR CHIP	1	
Q302,03		2SC2295	TRANSISTOR CHIP	2	(B,C)
Q304		2SD601	TRANSISTOR CHIP	1	(Q,R,S)
Q703		2SD601	TRANSISTOR	1	(S,T)
Q710		2SC2377	TRANSISTOR	1	(C,D)
Q712		2SD638	TRANSISTOR	1	
Q713		2SD1328	TRANSISTOR	1	
Q714		2SD601	TRANSISTOR CHIP	1	
Q771		2SD601	TRANSISTOR CHIP	1	
Q772,73		2SK198	TRANSISTOR CHIP	2	
Q804		2SB709	TRANSISTOR CHIP	1	
Q2001		2SB709	TRANSISTOR CHIP	1	
Q2002-04		2SD601	TRANSISTOR CHIP	3	
Q2006		2SD1330	TRANSISTOR	1	(S,T)
Q2108		2SD601	TRANSISTOR CHIP	1	
Q2111,12		2SD601	TRANSISTOR CHIP	2	
Q2801		2SD601	TRANSISTOR CHIP	1	
Q2802		2SB709	TRANSISTOR CHIP	1	
Q2803-06		2SD601	TRANSISTOR CHIP	4	
Q3002		2SC2295	TRANSISTOR	1	
Q3005		2SD601	TRANSISTOR CHIP	1	
Q3006		2SC2295	TRANSISTOR	1	
Q3007		2SB641	TRANSISTOR	1	
Q3011		2SB709	TRANSISTOR CHIP	1	
Q3013		2SD601	TRANSISTOR CHIP	1	
Q3014		2SA564	TRANSISTOR	1	(P,Q,R)
Q3801,02		2SB641	TRANSISTOR	2	(Q,R,S)
Q3803		2SD636	TRANSISTOR	1	
Q4001		2SD602	TRANSISTOR	1	(R)
Q6007		2SB643	TRANSISTOR	1	
Q6009		2SB643	TRANSISTOR	1	(R,S)
Q6016		2SD1275	TRANSISTOR	1	(P,Q)
Q6017		2SD893	TRANSISTOR	1	
Q6018		2SD973	TRANSISTOR	1	(S)
Q6019		2SD638	TRANSISTOR	1	
Q6020		2SD973	TRANSISTOR	1	(S)
Q7801		2SD636	TRANSISTOR	1	(Q,R,S)
Q7802,03		2SB641	TRANSISTOR	2	(Q,R,S)
			COMBINATION PARTS		
QR701		FA1L4M	TRANSISTOR-RESISTOR	1	
QR702		FA1L4M	TRANSISTOR-RESISTOR	1	
QR711,12		FA1F4M	TRANSISTOR-RESISTOR	2	
QR713		FA1A4M	TRANSISTOR-RESISTOR	1	
QR714		FA1A4M	TRANSISTOR-RESISTOR	1	
QR853		UN1213	TRANSISTOR-RESISTOR	1	
QR1101		UN2213	TRANSISTOR-RESISTOR	1	
QR2002		UN2212	TRANSISTOR-RESISTOR	1	
QR2007		UN2213	TRANSISTOR-RESISTOR	1	

Ref.No.		Part No.	Part Name & Description	Pcs	Remarks
QR2101,02		UN2113	TRANSISTOR-RESISTOR	2	
QR2103		UN2212	TRANSISTOR-RESISTOR	1	
QR2104		UN2110	TRANSISTOR-RESISTOR	1	
QR2105		UN2117	TRANSISTOR-RESISTOR	1	
QR2106		UN2115	TRANSISTOR-RESISTOR	1	
QR2107		UN2110	TRANSISTOR-RESISTOR	1	
QR2801,02		UN2213	TRANSISTOR-RESISTOR	2	
QR2804		UN2211	TRANSISTOR-RESISTOR	1	
QR3004		UN2111	TRANSISTOR-RESISTOR	1	
QR3011		UN2212	TRANSISTOR-RESISTOR	1	
QR4006		UN1112	TRANSISTOR-RESISTOR	1	
QR4007		UN2211	TRANSISTOR-RESISTOR	1	
QR6001		UN2212	TRANSISTOR-RESISTOR	1	
QR6006		UN2111	TRANSISTOR-RESISTOR	1	
QR6008		UN2119	TRANSISTOR-RESISTOR	1	
QR6011		UN2212	TRANSISTOR-RESISTOR	1	
QR6012		UN2113	TRANSISTOR-RESISTOR	1	
QR7551-54		UN2213	TRANSISTOR-RESISTOR	4	
QR7561		UN2211	TRANSISTOR-RESISTOR	1	
QR7851		UN1211	TRANSISTOR-RESISTOR	1	
QR7852		UN1213	TRANSISTOR-RESISTOR	1	
			RESISTORS		
R301		ERJ6GMYJ122	CHIP 1/16W 1.2K	1	
R302		ERJ6GMYJ391	CHIP 1/16W 390	1	
R303		ERJ6GMYJ103	CHIP 1/16W 10K	1	
R304		ERJ6GMYJ102	CHIP 1/16W 1K	1	
R305		ERJ6GMYJ824	CHIP 1/16W 820K	1	
R306		ERJ6GMYJ152	CHIP 1/16W 1.5K	1	
R307		ERJ6GMYJ102	CHIP 1/16W 1K	1	
R308		ERJ6GMYJ123	CHIP 1/16W 12K	1	
R309		ERJ6GMYJ272	CHIP 1/16W 2.7K	1	
R310		ERJ6GMYJ103	CHIP 1/16W 10K	1	
R311		ERJ6GMYJ272	CHIP 1/16W 2.7K	1	
R312		ERJ6GMYJ222	CHIP 1/16W 2.2K	1	
R316		ERJ6GMYJ104	CHIP 1/16W 100K	1	
R317		ERJ6GMYJ471	CHIP 1/16W 470	1	
R325		ERJ6GMYJ151	CHIP 1/16W 150	1	
R326		ERJ6GMYJ822	CHIP 1/16W 8.2K	1	
R327		ERJ6GMYJ332	CHIP 1/16W 3.3K	1	
R328		ERJ6GMYJ272	CHIP 1/16W 2.7K	1	
R329		ERJ6GMYJ103	CHIP 1/16W 10K	1	
R330		ERJ6GMYJ183	CHIP 1/16W 18K	1	
R331		ERJ6GMYJ102	CHIP 1/16W 1K	1	
R332		ERJ6GMYJ222	CHIP 1/16W 2.2K	1	
R334,35		ERJ6GMYJ102	CHIP 1/16W 1K	2	
R338		ERJ6GMYJ474	M.RESISTOR CH1/16W 470K	1	
R339		ERJ6GMYJ101	CHIP 1/16W 100	1	
R707		ERJ6GEYJ223	CHIP 1/16W 22K	1	
R712		ERJ6GEYJ682	CHIP 1/16W 6.8K	1	
R713		ERJ6GEYJ681	CHIP 1/16W 680	1	
R714		ERD2FCG330	C.RESISTOR 2W 33	1	<!>
R715		ERJ6GEYJ561	CHIP 1/16W 560	1	
R716		ERJ6GEYJ152	CHIP 1/16W 1.5K	1	
R717		ERJ6GEYJ332	CHIP 1/16W 3.3K	1	
R718		ERJ6GEYJ754	CHIP 1/16W 750K	1	
R719		ERJ6GEYJ682	CHIP 1/16W 6.8K	1	
R720		ERJ6GEYJ822	CHIP 1/16W 8.2K	1	
R721		ERJ6GEYJ332	CHIP 1/16W 3.3K	1	
R722		ERJ6GEYJ392	CHIP 1/16W 3.9K	1	
R723		ERJ6GEYJ183	CHIP 1/16W 180K	1	
R724		ERJ6GEYJ101	CHIP 1/16W 100	1	
R725		ERJ6GEYJ182	CHIP 1/16W 1.8K	1	
R726		ERJ6GEYJ472	CHIP 1/16W 4.7K	1	
R727		ERJ6GEYJ471	CHIP 1/16W 470	1	
R728		VRE0040E471T	V.RESISTOR 470	1	
R729,30		ERJ6GEYJ331	CHIP 1/16W 330	2	
R737		ERJ6GEYJ274	CHIP 1/16W 270K	1	
R738		ERJ6GEYJ334	CHIP 1/16W 330K	1	
R739		ERJ6GEYJ681	CHIP 1/16W 680	1	
R740		ERJ6GEYJ473	CHIP 1/16W 47K	1	
R741,42		ERJ6GEYJ272	CHIP 1/16W 2.7K	2	
R743		ERJ6GEYJ470	CHIP 1/16W 47	1	

To guarantee the FUNCTION,SAFETY and RELIABLITY of repaired units,only use ORIGINAL REPLACEMENT PARTS which are listed with their part numbers in this parts list section.

Ref.No.		Part No.	Part Name & Description	Pcs	Remarks
R744		ERJ6GEYJ821	CHIP 1/16W 820	1	
R745		ERJ6GEYJ331	CHIP 1/16W 330	1	
R746		VRE0040E181T		1	
R747		ERJ6GEYJ471	CHIP 1/16W 470	1	
R750		ERJ6GEYJ182	CHIP 1/16W 1.8K	1	
R757		ERJ6GEYJ222	CHIP 1/16W 2.2K	1	
R759		ERJ6GEYJ103	CHIP 1/16W 10K	1	
R760		ERJ6GEYJ102	CHIP 1/16W 1K	1	
R763		ERJ6GEYJ103	CHIP 1/16W 10K	1	
R764		ERJ6GEYJ822	CHIP 1/16W 8.2K	1	
R772		ERJ6GEYJ102	CHIP 1/16W 1K	1	
R773		ERJ6GEYJ103	CHIP 1/16W 10K	1	
R774		ERJ6GEYJ333	CHIP 1/16W 33K	1	
R775		ERJ6GEYJ474	CHIP 1/16W 470K	1	
R776		ERJ6GEYJ105	CHIP 1/16W 1M	1	
R777		ERJ6GEYJ184	CHIP 1/16W 180K	1	
R778		ERJ6GEYJ105	CHIP 1/16W 1M	1	
R779		ERJ6GEYJ104	CHIP 1/16W 100K	1	
R781		ERJ6GEYJ271	CHIP 1/16W 270	1	
R782		ERJ6GEYJ821	CHIP 1/16W 820	1	
R792		ERJ6GEYJ120	CHIP 1/16W 12	1	
R815		ERJ6GMYJ103	CHIP 1/16W 10K	1	
R816		ERJ6GMYJ822	CHIP 1/16W 8.2K	1	
R818		ERJ6GMYJ102	CHIP 1/16W 1K	1	
R819		ERJ6GMYJ182	CHIP 1/16W 1.8K	1	
R820		ERJ6GMYJ222	CHIP 1/16W 2.2K	1	
R821,22		ERJ6GMYJ103	CHIP 1/16W 10K	2	
R823		ERJ6GMYJ271	CHIP 1/16W 270	1	
R824		ERJ6GMYJ102	CHIP 1/16W 1K	1	
R825		ERJ6GMYJ182	CHIP 1/16W 1.8K	1	
R826		ERJ6GMYJ681	CHIP 1/16W 680	1	
R851		ERDS2TJ223	C.RESISTOR 1/4W 22K	1	
R852		ERDS2TJ390	C.RESISTOR 1/4W 39	1	
R853		ERDS2TJ154	C.RESISTOR 1/4W 150K	1	
R854		ERDS2TJ222	C.RESISTOR 1/4W 2.2K	1	
R855		ERDS2TJ102	C.RESISTOR 1/4W 1K	1	
R856		ERDS2TJ103	C.RESISTOR 1/4W 10K	1	
R858		ERDS2TJ561	C.RESISTOR 1/4W 560	1	
R1101		ERJ6GMYJ561	CHIP 1/16W 560	1	
R2007		ERJ6GMYJ472	CHIP 1/16W 4.7K	1	
R2008		ERJ6GMYJ682	CHIP 1/16W 6.8K	1	
R2009		ERJ6GMYJ472	CHIP 1/16W 4.7K	1	
R2010		ERJ6GMYJ223	CHIP 1/16W 22K	1	
R2011		ERJ6GMYJ561	CHIP 1/16W 560	1	
R2029		ERJ6GMYJ683	CHIP 1/16W 68K	1	
R2030		ERJ6GMYJ333	CHIP 1/16W 33K	1	
R2031		ERJ6GMYJ473	CHIP 1/16W 47K	1	
R2032		ERJ6GMYJ124	CHIP 1/16W 120K	1	
R2033		ERJ6GMYJ683	CHIP 1/16W 68K	1	
R2034		ERJ6GMYJ391	CHIP 1/16W 390	1	
R2037		ERJ6GMYJ103	CHIP 1/16W 10K	1	
R2038		ERJ6GMYJ104	CHIP 1/16W 100K	1	
R2046		ERJ6GMYJ153	CHIP 1/16W 15K	1	
R2047,48		ERJ6GMYJ154	CHIP 1/16W 150K	2	
R2049		ERJ6GMYJ273	CHIP 1/16W 27K	1	
R2050		ERJ6GMYJ102	CHIP 1/16W 1K	1	
R2051		ERJ6GMYJ222	CHIP 1/16W 2.2K	1	
R2054		ERJ6GMY0R00	CHIP 1/16W 0	1	
R2056		ERDS2TJ471	C.RESISTOR 1/4W 470	1	
R2106		ERJ6GMYJ392	CHIP 1/16W 3.9K	1	
R2108		ERJ6GMYJ222	CHIP 1/16W 2.2K	1	
R2109		ERJ6GMYJ682	CHIP 1/16W 6.8K	1	
R2110		ERJ6GMYJ274	CHIP 1/16W 270K	1	
R2111		ERJ6GMYJ563	CHIP 1/16W 56K	1	
R2112,13		ERJ6GMYJ154	CHIP 1/16W 150K	2	
R2114		ERJ6GMYJ224	CHIP 1/16W 220K	1	
R2115		ERJ6GMYJ272	CHIP 1/16W 2.7K	1	
R2117		ERJ6GMYJ683	CHIP 1/16W 68K	1	
R2119		ERJ6GMYJ333	CHIP 1/16W 33K	1	
R2120		ERJ6GMYJ274	CHIP 1/16W 270K	1	
R2121		ERJ6GMY0R00	CHIP 1/16W 0	1	
R2122,23		ERJ6GMYJ332	CHIP 1/16W 3.3K	2	
R2124		ERJ6GMYJ561	CHIP 1/16W 560	1	
R2125		ERJ6GMYJ222	CHIP 1/16W 2.2K	1	
R2131		ERJ6GMYJ152	CHIP 1/16W 1.5K	1	

Ref.No.		Part No.	Part Name & Description	Pcs	Remarks
R2132,33		ERJ6GMYJ563	CHIP 1/16W 56K	2	
R2134		ERJ6GMYJ472	CHIP 1/16W 4.7K	1	
R2135		ERJ6GMYJ333	CHIP 1/16W 33K	1	
R2136,37		ERJ6GMYJ154	CHIP 1/16W 150K	2	
R2138		ERJ6GMYJ124	CHIP 1/16W 120K	1	
R2139		ERJ6GMYJ392	CHIP 1/16W 3.9K	1	
R2140		ERJ6GMYG333	CHIP 1/16W 33K	1	
R2141		ERJ6GMYJ684	CHIP 1/16W 680K	1	
R2142		ERJ6GMYJ154	CHIP 1/16W 150K	1	
R2143		ERJ6GMYJ683	CHIP 1/16W 68K	1	
R2144,45		ERJ6GMYJ223	CHIP 1/16W 22K	2	
R2146		ERJ6GMYJ103	CHIP 1/16W 10K	1	
R2147		ERJ6GMYJ392	CHIP 1/16W 3.9K	1	
R2148		ERJ6GMYJ223	CHIP 1/16W 22K	1	
R2149		ERJ6GMYG472	M.RESISTOR CH1/16W 4.7K	1	
R2150		ERJ6GMYJ821	CHIP 1/16W 820	1	
R2151		ERJ6GMYJ824	CHIP 1/16W 820K	1	
R2153		ERJ6GMYJ684	CHIP 1/16W 680K	1	
R2156		ERJ6GMYJ123	CHIP 1/16W 12K	1	
R2157		ERJ6GMYJ562	CHIP 1/16W 5.6K	1	
R2158		ERJ6GMYJ683	CHIP 1/16W 68K	1	
R2159,60		ERJ6GMYJ223	CHIP 1/16W 22K	2	
R2161		ERJ6GMYJ183	CHIP 1/16W 18K	1	
R2166,67		ERJ6GMYJ563	CHIP 1/16W 56K	2	
R2168,69		ERJ6GMYJ562	CHIP 1/16W 5.6K	2	
R2174		ERJ6GMYJ103	CHIP 1/16W 10K	1	
R2175		ERJ6GMYJ334	CHIP 1/16W 330K	1	
R2177		ERJ6GMYJ681	CHIP 1/16W 680	1	
R2178		ERJ6GMYJ104	CHIP 1/16W 100K	1	
R2179		ERJ6GMYJ683	CHIP 1/16W 68K	1	
R2181		ERJ6GMYJ472	CHIP 1/16W 4.7K	1	
R2182		ERJ6GMYJ473	CHIP 1/16W 47K	1	
R2183		ERJ6GMYJ103	CHIP 1/16W 10K	1	
R2184		ERJ6GMYJ102	CHIP 1/16W 1K	1	
R2185		ERJ6GMYJ223	CHIP 1/16W 22K	1	
R2186,87		ERJ6GMYJ222	CHIP 1/16W 2.2K	2	
R2188		ERJ6GMYJ223	CHIP 1/16W 22K	1	
R2189		ERJ6GMYJ222	CHIP 1/16W 2.2K	1	
R2190		ERJ6GMYJ821	CHIP 1/16W 820	1	
R2191		ERJ6GMYJ105	CHIP 1/16W 1M	1	
R2192		ERJ6GMYJ472	CHIP 1/16W 4.7K	1	
R2501-03		ERDS2TJ330	C.RESISTOR 1/4W 33	3	
R2504		ERDS1TJ1R0	C.RESISTOR 1/2W 1.0	1	
R2505		ERJ6GMYJ102	CHIP 1/16W 1K	1	
R2506		ERJ6GMYG512	CHIP 1/16W 5.1K	1	
R2518		ERJ6GMYJ330	CHIP 1/16W 33	1	
R2801,02		ERJ6GMYJ103	CHIP 1/16W 10K	2	
R2803		ERJ6GMYJ561	CHIP 1/16W 560	1	
R2804		ERJ6GMYJ393	CHIP 1/16W 39K	1	
R2805		ERJ6GMYJ332	CHIP 1/16W 3.3K	1	
R2806		ERJ6GMYJ221	CHIP 1/16W 220	1	
R2807		ERJ6GMYJ823	M.RESISTOR CH1/16W 82K	1	
R2808		ERJ6GMYJ103	CHIP 1/16W 10K	1	
R2809		ERJ6GMYJ750	CHIP 1/16W 75	1	
R2810		ERJ6GMYJ124	CHIP 1/16W 120K	1	
R2811		ERJ6GMYG113	M.RESISTOR CH1/16W 11K	1	
R2812		ERJ6GMYJ153	CHIP 1/16W 15K	1	
R2813		ERJ6GMYJ221	CHIP 1/16W 220	1	
R2814		ERJ6GMYJ102	CHIP 1/16W 1K	1	
R2815,16		ERJ6GMYJ473	CHIP 1/16W 47K	2	
R2817		ERJ6GMYJ223	CHIP 1/16W 22K	1	
R2818		ERJ6GMYJ102	CHIP 1/16W 1K	1	
R2819		ERJ6GMYJ124	CHIP 1/16W 120K	1	
R2820		ERJ6GMYJ221	CHIP 1/16W 220	1	
R2821		ERJ6GMYJ103	CHIP 1/16W 10K	1	
R2822		ERJ6GMYJ124	CHIP 1/16W 120K	1	
R2823		ERJ6GMYJ473	CHIP 1/16W 47K	1	
R2824		ERJ6GMYJ103	CHIP 1/16W 10K	1	
R2825		ERJ6GMYJ473	CHIP 1/16W 47K	1	
R2831		ERJ6GMYJ272	CHIP 1/16W 2.7K	1	
R2832		ERJ6GMYJ822	CHIP 1/16W 8.2K	1	
R2833		ERJ6GMYJ103	CHIP 1/16W 10K	1	
R3001,02		ERJ6GMYJ103	CHIP 1/16W 10K	2	
R3006		ERJ6GMYJ473	CHIP 1/16W 47K	1	
R3009		ERJ6GMYJ152	CHIP 1/16W 1.5K	1	

To guarantee the FUNCTION,SAFETY and RELIABLITY of repaired units,only use ORIGINAL REPLACEMENT PARTS which are listed with their part numbers in this parts list section.

Ref.No.		Part No.	Part Name & Description			Pcs	Remarks
R3010		ERJ6GMYJ392	CHIP	1/16W	3.9K	1	
R3011		ERJ6GMYJ102	CHIP	1/16W	1K	1	
R3022,23		ERJ6GMYJ821	CHIP	1/16W	820	2	
R3028		ERJ6GMYJ102	CHIP	1/16W	1K	1	
R3029		ERJ6GMYJ272	CHIP	1/16W	2.7K	1	
R3030		ERJ6GMYJ750	CHIP	1/16W	75	1	
R3032		ERJ6GMYJ104	CHIP	1/16W	100K	1	
R3033		ERJ6GMYJ183	CHIP	1/16W	18K	1	
R3042		ERJ6GMYJ102	CHIP	1/16W	1K	1	
R3054		ERJ6GMY0R00	CHIP	1/16W	0	1	
R3055		ERJ6GMYJ101	CHIP	1/16W	100	1	
R3056		ERJ6GMYJ152	CHIP	1/16W	1.5K	1	
R3062		ERJ6GMYJ223	CHIP	1/16W	22K	1	
R3063		ERJ6GMYJ332	CHIP	1/16W	3.3K	1	
R3064		ERJ6GMYJ152	CHIP	1/16W	1.5K	1	
R3065		ERJ6GMYJ561	CHIP	1/16W	560	1	
R3066		ERJ6GMYJ222	CHIP	1/16W	2.2K	1	
R3067		ERJ6GMYJ472	CHIP	1/16W	4.7K	1	
R3068		ERJ6GMYJ562	CHIP	1/16W	5.6K	1	
R3069		ERJ6GMYJ151	CHIP	1/16W	150	1	
R3070		ERJ6GMYJ562	CHIP	1/16W	5.6K	1	
R3071		ERJ6GMYJ104	CHIP	1/16W	100K	1	
R3072		ERJ6GMYJ393	CHIP	1/16W	39K	1	
R3073		ERJ6GMYJ222	CHIP	1/16W	2.2K	1	
R3074		ERJ6GMYJ822	CHIP	1/16W	8.2K	1	
R3075		ERJ6GMYJ332	CHIP	1/16W	3.3K	1	
R3076		ERJ6GMYJ393	CHIP	1/16W	39K	1	
R3077		ERJ6GMYJ122	CHIP	1/16W	1.2K	1	
R3081		ERJ6GMYJ273	CHIP	1/16W	27K	1	
R3084		ERJ6GMYJ222	CHIP	1/16W	2.2K	1	
R3085		ERJ6GMYJ221	CHIP	1/16W	220	1	
R3087,88		ERJ6GMYJ222	CHIP	1/16W	2.2K	2	
R3801,02		ERDS2TJ124	C.RESISTOR	1/4W	120K	2	
R3803		ERDS2TJ223	C.RESISTOR	1/4W	22K	1	
R3804		ERDS2TJ222	C.RESISTOR	1/4W	2.2K	1	
R3805		ERG1ANJ820	M.RESISTOR	1W	82	1	
R3806		ERDS2TJ103	C.RESISTOR	1/4W	10K	1	
R3807		ERDS2TJ473	C.RESISTOR	1/4W	47K	1	
R3808		ERDS2TJ753	C.RESISTOR	1/4W	75K	1	
R3809		ERDS2TJ183	C.RESISTOR	1/4W	18K	1	
R3810,11		ERDS2TJ474	C.RESISTOR	1/4W	470K	2	
R3812		ERDS2TJ102	C.RESISTOR	1/4W	1K	1	
R3813		ERDS2TJ471	C.RESISTOR	1/4W	470	1	
R3814-16		ERDS2TJ750	C.RESISTOR	1/4W	75	3	
R3817		ERDS2TJ333	C.RESISTOR	1/4W	33K	1	
R3818		ERDS2TJ183	C.RESISTOR	1/4W	18K	1	
R3819		ERDS2TJ750	C.RESISTOR	1/4W	75	1	
R3820		ERDS2TJ101	C.RESISTOR	1/4W	100	1	
R3821,22		ERDS2TJ242	C.RESISTOR	1/4W	2.4K	2	
R3824		ERDS2TJ471	C.RESISTOR	1/4W	470	1	
R3825		ERDS2TJ222	C.RESISTOR	1/4W	2.2K	1	
R3826		ERDS2TJ101	C.RESISTOR	1/4W	100	1	
R4001		ERJ6GMYJ183	CHIP	1/16W	18K	1	
R4002		ERJ6GMYJ100	CHIP	1/16W	10	1	
R4003		ERJ6GMYJ203	CHIP	1/16W	2K	1	
R4004		ERJ6GMYJ562	CHIP	1/16W	5.6K	1	
R4005		ERJ6GMY0R00	CHIP	1/16W	0	1	
R4006		ERJ6GMYJ151	CHIP	1/16W	150	1	
R4007		ERJ6GMYJ221	CHIP	1/16W	220	1	
R4008		ERJ6GMYJ122	CHIP	1/16W	1.2K	1	
R4009		ERJ6GMYJ104	CHIP	1/16W	100K	1	
R4010		ERJ6GMYJ683	CHIP	1/16W	68K	1	
R4012		ERJ6GMYJ331	CHIP	1/16W	330	1	
R4013		ERJ6GMYJ334	CHIP	1/16W	330K	1	
R4014		ERJ6GMYJ103	CHIP	1/16W	10K	1	
R4015		ERJ6GMY0R00	CHIP	1/16W	0	1	
R4016		ERJ6GMYJ105	CHIP	1/16W	1M	1	
R4017		ERJ6GMYJ272	CHIP	1/16W	2.7K	1	
R4018		ERJ6GMYJ223	CHIP	1/16W	22K	1	
R4019		ERJ6GMYJ562	CHIP	1/16W	5.6K	1	
R4020		ERJ6GMYJ563	CHIP	1/16W	56K	1	
R4021		ERJ6GMYJ562	CHIP	1/16W	5.6K	1	
R4022		ERJ6GMYJ104	CHIP	1/16W	100K	1	
R4023		ERJ6GMYG473	CHIP	1/16W	47K	1	
R4024,25		ERJ6GMYG104	CHIP	1/16W	100K	2	

Ref.No.		Part No.	Part Name & Description			Pcs	Remarks
R4051		ERJ6GMYJ123	CHIP	1/16W	12K	1	
R4052		ERJ6GMYJ153	CHIP	1/16W	15K	1	
R4054		ERJ6GMYJ102	CHIP	1/16W	1K	1	
R4055		ERJ6GMYJ681	CHIP	1/16W	680	1	
R6001		ERDS1TJ470	C.RESISTOR	1/2W	47	1	
R6002		ERJ6GMYJ473	CHIP	1/16W	47K	1	
R6006		ERD2FCVG220	C.RESISTOR	2W	22	1	<!>
R6007		ERJ6GMYJ122	CHIP	1/16W	1.2K	1	
R6008		ERJ6GMYJ181	CHIP	1/16W	180	1	
R6009		ERJ6GMYJ561	CHIP	1/16W	560	1	
R6010		ERJ6GMYJ102	CHIP	1/16W	1K	1	
R6011		ERJ6GMYJ221	CHIP	1/16W	220	1	
R6014		ERJ6GMYJ392	CHIP	1/16W	3.9K	1	
R6017		ERJ6GMYJ223	CHIP	1/16W	22K	1	
R6023		ERJ6GMYJ683	CHIP	1/16W	68K	1	
R6024		ERJ6GMYJ223	CHIP	1/16W	22K	1	
R6027		ERJ6GMYJ223	CHIP	1/16W	22K	1	
R6028		ERJ6GMYJ184	CHIP	1/16W	180K	1	
R6029		ERJ6GMYJ561	CHIP	1/16W	560	1	
R6030,31		ERJ6GMYJ153	CHIP	1/16W	15K	2	
R6032		ERJ6GMYJ332	CHIP	1/16W	3.3K	1	
R6033,34		ERJ6GMYJ333	CHIP	1/16W	33K	2	
R6035-37		ERJ6GMYJ101	CHIP	1/16W	100	3	
R6038		ERJ6GMYJ272	CHIP	1/16W	2.7K	1	
R6041		ERJ6GMYJ391	CHIP	1/16W	390	1	
R6046		ERJ6GMYJ152	CHIP	1/16W	1.5K	1	
R6050		ERJ6GMYJ562	CHIP	1/16W	5.6K	1	
R6051		ERJ6GMYJ332	CHIP	1/16W	3.3K	1	
R6060		ERJ6GMYJ822	CHIP	1/16W	8.2K	1	
R6067		ERJ6GMYJ101	CHIP	1/16W	100	1	
R6068		ERDS1TJ332	C.RESISTOR	1/2W	3.3K	1	
R6069		ERJ6GMYJ103	CHIP	1/16W	10K	1	
R6070		ERJ6GMYJ471	CHIP	1/16W	470	1	
R6071		ERJ6GMYJ152	CHIP	1/16W	1.5K	1	
R6072		ERJ6GMYJ562	CHIP	1/16W	5.6K	1	
R6073		ERJ6GMYJ131	CHIP	1/16W	130	1	
R6074		ERJ6GMYJ221	CHIP	1/16W	220	1	
R6075		ERG3SJ220	M.RESISTOR	3W	22	1	
R6079		ERJ6GMYJ103	CHIP	1/16W	10K	1	
R6083		ERJ6GMYJ104	CHIP	1/16W	100K	1	
R6084,85		ERJ6GMYJ561	CHIP	1/16W	560	2	
R6087-89		ERJ6GMYJ272	CHIP	1/16W	2.7K	3	
R6090		ERJ6GMYJ821	CHIP	1/16W	820	1	
R6091		ERJ6GMYJ103	CHIP	1/16W	10K	1	
R6093		ERDS2TJ562	C.RESISTOR	1/4W	5.6K	1	
R6095		ERDS2TJ222	C.RESISTOR	1/4W	2.2K	1	
R6096		ERJ6GMYJ681	CHIP	1/16W	680	1	
R6098		ERJ6GMYJ101	CHIP	1/16W	100	1	
R6099		ERJ6GMYJ201	CHIP	1/16W	200	1	
R7551,52		ERJ6GMYJ473	CHIP	1/16W	47K	2	
R7553		ERJ6GMYJ104	CHIP	1/16W	100K	1	
R7554		ERJ6GMYJ124	CHIP	1/16W	120K	1	
R7555		ERJ6GMYJ103	CHIP	1/16W	10K	1	
R7556		ERG1SJ152	M.RESISTOR	1W	1.5K	1	
R7557		ERJ6GMYJ103	CHIP	1/16W	10K	1	
R7558		ERJ6GMYJ332	CHIP	1/16W	3.3K	1	
R7561,62		ERJ6GMYJ473	CHIP	1/16W	47K	2	
R7563		ERJ6GMYJ563	CHIP	1/16W	56K	1	
R7564		ERJ6GMYJ393	CHIP	1/16W	39K	1	
R7565		ERJ6GMYJ103	CHIP	1/16W	10K	1	
R7566		ERJ6GMYJ562	CHIP	1/16W	5.6K	1	
R7567		ERJ6GMYJ682	CHIP	1/16W	6.8K	1	
R7568		ERJ6GMYJ332	CHIP	1/16W	3.3K	1	
R7577		ERDS2TJ100	C.RESISTOR	1/4W	10	1	
R7578		ERJ6GMYJ223	CHIP	1/16W	22K	1	
R7583		ERJ6GMYJ103	CHIP	1/16W	10K	1	
R7595		ERJ6GMYJ181	CHIP	1/16W	180	1	
R7597		ERJ6GMYJ102	CHIP	1/16W	1K	1	
R7803,04		ERDS2TJ103	C.RESISTOR	1/4W	10K	2	
R7809		ERDS2TJ683	C.RESISTOR	1/4W	68K	1	
R7810		ERDS2TJ223	C.RESISTOR	1/4W	22K	1	
R7811		ERDS2TJ332	C.RESISTOR	1/4W	3.3K	1	
R7812		ERDS2TJ152	C.RESISTOR	1/4W	1.5K	1	
R7813-15		ERDS2TJ102	C.RESISTOR	1/4W	1K	3	
R7816		ERDS2TJ472	C.RESISTOR	1/4W	4.7K	1	

To guarantee the FUNCTION,SAFETY and RELIABLITY of repaired units,only use ORIGINAL REPLACEMENT PARTS which are listed with their part numbers in this parts list section.

Ref.No.		Part No.	Part Name & Description	Pcs	Remarks
R7817		ERDS2TJ103	C.RESISTOR 1/4W 10K	1	
R7818		ERDS2TJ221	C.RESISTOR 1/4W 220	1	
R7851		ERDS2TJ103	C.RESISTOR 1/4W 10K	1	
R7860		ERDS2TJ471	C.RESISTOR 1/4W 470	1	
			SWITCH		
SW3801		VSS0226	SWITCH	1	
			TRANSFORMERS		
T703		EIV5EC013A	TRANSFORMER	1	
T704		EIV5EC006A	TRANSFORMER	1	
T710		EULBEF022	TRANSFORMER	1	
T711		EIS5EC004A	TRANSFORMER	1	
T851		ELM7Q207A	TRANSFORMER	1	
T4001		EIQ7QF014Q	TRANSFORMER	1	
			VARIABLE RESISTORS		
VR302		EVN3ACA00B14	V.RESISTOR 10K	1	
VR701,02		EVM4LGA00B23	V.RESISTOR 2K	2	
VR741		EVNDRAA00B14	V.RESISTOR 10K	1	
VR751		EVNDRAA00B53	V.RESISTOR 5K	1	
VR803		EVNDXAA00B14	V.RESISTOR 10K	1	
VR2001		EVNDRAA00B54	V.RESISTOR 50K	1	
VR2002		EVNDRAA00B15	V.RESISTOR 100K	1	
VR2010		EVL51MA00B25	V.RESISTOR 200K	1	
VR2011		EVNDRAA00B15	V.RESISTOR 100K	1	
VR2013		EVNDRAA00B23	V.RESISTOR 2K	1	
VR3012		EVNDRAA00B52	V.RESISTOR 500	1	
VR3020		EVN38CA00B23	V.RESISTOR 2K	1	
VR4001		EVNDRAA00B14	V.RESISTOR 10K	1	
VR4002		EVNDRAA00B25	V.RESISTOR 200K	1	
			CRYSTAL OSCILLATOR & FILTER		
X301		VSX0225	CRYSTAL OSCILLATOR	1	
X710		EFCH38MSP1	SAW FILTER	1	
X711		EFCS5R5MW5	FILTER	1	
X712		EFCS5R5MS5	FILTER	1	
X715		ELB5A043	FILTER	1	
X716		EFCA40R40M1	FILTER	1	
X717		ELB5A048	TRANSFORMER	1	
X801		VSX0162A	CRYSTAL OSCILLATOR	1	
X3001		VSX0099	CRYSTAL OSCILLATOR	1	
X6001		VSX0204	CRYSTAL OSCILLATOR	1	
X7504		VSQ0565	SENSOR	1	
X7801		VSX0173	CRYSTAL OSCILLATOR	1	
X7851		EFOA4ROMO3C2	CRYSTAL OSCILLATOR	1	
			MISCELLANEOUS		
		VSC1068	HEAT SINK	1	FOR IC6003
		VWJ0228	FLEXIBLE CABLE 13P	1	P7502-P7401
		VEJ0643	REAR JACK	1	
		ENC87966	RF CONVERTER UNIT	1	<!>
		TNV57481F1	TUNER	1	<!>
		VMC0075	HEAT SINK SPRING	1	FORIC2501
		VSC1689	HEAT SINK	1	FORIC2501
		VJF0215	BINDER	1	
		VSC2232	SHIELD CASE (TOP)	1	FOR TV DEMODU.PACK
		VSC2233	SHIELD CASE (MAIN)	1	FOR TV DEMODU.PACK
		VSC2396	SHIELD CASE (BOTTOM)	1	FOR TV DEMODU.PACK
	■	VEP03493BG	MAIN C.B.A.		NV-D48B<!>(NLA)
			CAPACITORS		
C301		ECEA1EKN2R2	E.CAPACITOR 25V 2.2U	1	
C302		ECEA0JK220	E.CAPACITOR 6.3V 22U	1	
C303		ECUX1E104ZFN	CHIP 25V 0.1U	1	

Ref.No.		Part No.	Part Name & Description	Pcs	Remarks
C304		ECEA0JU331	E.CAPACITOR 6.3V 330U	1	
C305		ECEA1CK100	E.CAPACITOR 16V 10U	1	
C306		ECEA1EK4R7	E.CAPACITOR 25V 4.7U	1	
C307		ECUM1H470JCN	CHIP 50V 47P	1	
C308		ECUM1H220JCN	CHIP 50V 22P	1	
C310		ECEA1CK100	E.CAPACITOR 16V 10U	1	
C311,12		ECUM1H180JCN	CHIP 50V 18P	2	
C313		ECEA1CK100	E.CAPACITOR 16V 10U	1	
C314		ECUM1H121JCN	CHIP 50V 120P	1	
C315		ECUM1H560JCN	CHIP 50V 56P	1	
C317		ECEA1AK470	E.CAPACITOR 10V 47U	1	
C319		ECUM1H471KBN	CHIP 50V 470P	1	
C320		ECUM1H270JCN	CHIP 50V 27P	1	
C321		ECEA1HK010	E.CAPACITOR 50V 1U	1	
C322		ECEA1HK2R2	E.CAPACITOR 50V 2.2U	1	
C324		ECEA1CK100	E.CAPACITOR 16V 10U	1	
C325,26		ECUM1H103ZFN	CHIP 50V 0.01U	2	
C327,28		ECEA1CK100	E.CAPACITOR 16V 10U	2	
C329		ECUM1H103ZFN	CHIP 50V 0.01U	1	
C331		ECUM1H103ZFN	CHIP 50V 0.01U	1	
C332		ECQV1H334JZ	P.CAPACITOR 50V 0.33U	1	
C333		ECEA1HK4R7	E.CAPACITOR 50V 4.7U	1	
C334		ECUM1H103ZFN	CHIP 50V 0.01U	1	
C335		ECUM1H680JCN	CHIP 50V 68P	1	
C336		ECUM1H101JCN	CHIP 50V 100P	1	
C337		ECUM1H270JCN	CHIP 50V 27P	1	
C338		ECUX1E104ZFN	CHIP 25V 0.1U	1	
C339		ECUM1H680JCN	CHIP 50V 68P	1	
C340		ECEA1EK4R7	E.CAPACITOR 25V 4.7U	1	
C349		ECUM1H470JCN	CHIP 50V 47P	1	
C351		ECCF1H220JC	C.CAPACITOR 50V 22P	1	
C352		ECQB1H562JH	P.CAPACITOR 50V 5600P	1	
C353		ECUM1H560JCN	CHIP 50V 56P	1	
C701,02		ECEA1CK100	E.CAPACITOR 16V 10U	2	
C703		ECEA1HK2R2	E.CAPACITOR 50V 2.2U	1	
C706		ECQV1H823JZ	P.CAPACITOR 50V 0.082U	1	
C707		ECEA1HKS010	E.CAPACITOR 50V 1U	1	
C710		ECUX1H103ZFN	CHIP 50V 0.01U	1	
C715-20		ECUX1H103ZFN	CHIP 50V 0.01U	6	
C721		ECEA1HKR27	E.CAPACITOR 50V 0.27U	1	
C722		ECUX1H103ZFN	CHIP 50V 0.01U	1	
C723		ECUM1H120JCN	C.CAPACITOR CH 50V 12P	1	
C725		ECQV1H104JZ	P.CAPACITOR 50V 0.1U	1	
C728		ECUX1H103ZFN	CHIP 50V 0.01U	1	
C730		ECEA1CK100	E.CAPACITOR 16V 10U	1	
C731		ECEA1CKS100	E.CAPACITOR 16V 10U	1	
C732		ECQV1H224B	M.CAPACITOR 50V 0.22U	1	
C734		ECUX1H103ZFN	CHIP 50V 0.01U	1	
C735		ECUX1H070DCN	CHIP 50V 7P	1	
C736		ECQB1H103JH	P.CAPACITOR 50V 0.01U	1	
C737		ECUX1H151JCN	CHIP 50V 150P	1	
C739		ECEA1HK010	E.CAPACITOR 50V 1U	1	
C740		ECUX1H103ZFN	CHIP 50V 0.01U	1	
C741		ECEA1CK100	E.CAPACITOR 16V 10U	1	
C742		ECUX1H030CCN	CHIP 50V 3P	1	
C743		ECUM1H270RSN	CHIP 50V 27P	1	
C744		ECEA1HKR47	E.CAPACITOR 50V 0.47U	1	
C745		ECUX1H680JPN	CHIP 50V 68P	1	
C746		ECUX1H150JCN	CHIP 50V 15P	1	
C747		ECUX1H103ZFN	CHIP 50V 0.01U	1	
C748		ECEA1CK330	E.CAPACITOR 16V 33U	1	
C749		ECEA1CK100	E.CAPACITOR 16V 10U	1	
C760		ECQV1H473JZ	P.CAPACITOR 50V 0.047U	1	
C781		ECUX1H390JCN	CHIP 50V 39P	1	
C782		ECUM1H060DCN	CHIP 50V 6P	1	
C801		ECUM1H103ZFN	CHIP 50V 0.01U	1	
C814		ECEA1AK101	E.CAPACITOR 10V 100U	1	
C815		ECQV1H154JZ	P.CAPACITOR 50V 0.15U	1	
C816		ECUX1E104ZFN	CHIP 25V 0.1U	1	
C817		ECQV1H274JZ	P.CAPACITOR 50V 0.27U	1	
C818		ECUM1H471KBN	CHIP 50V 470P	1	
C819		ECUM1H820JCN	CHIP 50V 82P	1	
C820		ECEA1HK2R2	E.CAPACITOR 50V 2.2U	1	
C821		ECEA1HFS4R7	E.CAPACITOR 50V 4.7U	1	
C823		ECEA1HK2R2	E.CAPACITOR 50V 2.2U	1	

To guarantee the FUNCTION,SAFETY and RELIABLITY of repaired units,only use ORIGINAL REPLACEMENT PARTS which are listed with their part numbers in this parts list section.

Ref.No.		Part No.	Part Name & Description			Pcs	Remarks
C824		ECEA1HK010	E.CAPACITOR	50V	1U	1	
C825		ECUM1H101JCN	CHIP	50V	100P	1	
C826		ECEA1AU221	E.CAPACITOR	10V	220U	1	
C827		ECUM1H050CCN	CHIP	50V	5P	1	
C828		ECUM1H102KBN	CHIP	50V	1000P	1	
C829		ECQV1H474JZ	P.CAPACITOR	50V	0.47U	1	
C831,32		ECUX1E104ZFN	CHIP	25V	0.1U	2	
C1101		ECEA1EK100	E.CAPACITOR	25V	10U	1	
C1103		ECEA0JK101	E.CAPACITOR	6.3V	100U	1	
C2022		ECEA1CK100	E.CAPACITOR	16V	10U	1	
C2023		ECEA1HKR47	E.CAPACITOR	50V	0.47U	1	
C2024		ECUM1H182KBN	CHIP	50V	1800P	1	
C2026		ECQB1H333JH	P.CAPACITOR	50V	0.033U	1	
C2027		ECEA0JK470	E.CAPACITOR	6.3V	47U	1	
C2104		ECEA1CKN100	E.CAPACITOR	16V	10U	1	
C2105		VCYD1C473MR1	S.CAPACITOR	16V	0.047U	1	
C2106		ECEA1CK100	E.CAPACITOR	16V	10U	1	
C2107		ECEA1HKN010	E.CAPACITOR	50V	1U	1	
C2108		ECEA1CK100	E.CAPACITOR	16V	10U	1	
C2109		ECEA1HKN010	E.CAPACITOR	50V	1U	1	
C2110		ECEA0JK330	E.CAPACITOR	6.3V	33U	1	
C2112		VCYD1C104MR1	S.CAPACITOR	16V	0.1U	1	
C2113		ECQV1H683JZ	P.CAPACITOR	50V	0.068U	1	
C2114		ECUM1H102KBN	CHIP	50V	1000P	1	
C2115		ECEA1HKNR33	E.CAPACITOR	50V	0.33U	1	
C2116		VCYD1C104MR1	S.CAPACITOR	16V	0.1U	1	
C2117		ECEA1HKR47	E.CAPACITOR	50V	0.47U	1	
C2118		ECUM1H472KBN	CHIP	50V	4700P	1	
C2119		ECQV1H334JZ	P.CAPACITOR	50V	0.33U	1	
C2120		ECUM1H103ZFN	CHIP	50V	0.01U	1	
C2121		VCYD1C104MR1	S.CAPACITOR	16V	0.1U	1	
C2122		ECUM1H562KBN	CHIP	50V	5600P	1	
C2123		VCYD1E223KR	S.CAPACITOR	25V	0.022U	1	
C2124,25		ECEA0JK470	E.CAPACITOR	6.3V	47U	2	
C2126		ECUM1H102KBN	CHIP	50V	1000P	1	
C2127		ECUM1H332KBN	CHIP	50V	3300P	1	
C2129		ECQB1H272JH	P.CAPACITOR	50V	2700P	1	
C2130		ECEA1CKN100	E.CAPACITOR	16V	10U	1	
C2131		ECEA1HK010	E.CAPACITOR	50V	1U	1	
C2132		ECEA1CK100	E.CAPACITOR	16V	10U	1	
C2134		ECUM1H102KBN	CHIP	50V	1000P	1	
C2137		ECUM1H562KBN	CHIP	50V	5600P	1	
C2138		ECEA0JK101	E.CAPACITOR	6.3V	100U	1	
C2139		ECEA0JK221	E.CAPACITOR	6.3V	220U	1	
C2140		ECEA1CK100	E.CAPACITOR	16V	10U	1	
C2141		ECEA0JK470	E.CAPACITOR	6.3V	47U	1	
C2142,43		ECUM1H103ZFN	CHIP	50V	0.01U	2	
C2146		VCYD1C104MR1	S.CAPACITOR	16V	0.1U	1	
C2147		ECEA1CK100	E.CAPACITOR	16V	10U	1	
C2148		ECUM1H102KBN	CHIP	50V	1000P	1	
C2155		ECEA0JK101	E.CAPACITOR	6.3V	100U	1	
C2156		ECUM1H103ZFN	CHIP	50V	0.01U	1	
C2158		ECUM1E103KBN	CHIP	25V	0.01U	1	
C2172		ECEA1EK3R3	E.CAPACITOR	25V	3.3U	1	
C2174		ECUM1H102KBN	CHIP	50V	1000P	1	
C2175		ECUM1E103KBN	CHIP	25V	0.01U	1	
C2176		ECQV1H154JZ	P.CAPACITOR	50V	0.15U	1	
C2177		ECEA0JK470	E.CAPACITOR	6.3V	47U	1	
C2178		ECEA1HKR22	E.CAPACITOR	50V	0.22U	1	
C2179		ECUM1E103KBN	CHIP	25V	0.01U	1	
C2181,82		ECEA0JK470	E.CAPACITOR	6.3V	47U	2	
C2184		ECUM1H332KBN	CHIP	50V	3300P	1	
C2191,92		ECQV1H104JZ	P.CAPACITOR	50V	0.1U	2	
C2501-03		ECQB1H333JH	P.CAPACITOR	50V	0.033U	3	
C2504-06		ECEA1HK2R2	E.CAPACITOR	50V	2.2U	3	
C2507		ECQB1H223JH	P.CAPACITOR	50V	0.022U	1	
C2508		ECQV1H104JZ	P.CAPACITOR	50V	0.1U	1	
C2511		ECEA1CK101	E.CAPACITOR	16V	100U	1	
C2512-14		ECUM1H332KBN	CHIP	50V	3300P	3	
C2517		ECEA1CK470	E.CAPACITOR	16V	47U	1	
C2519		ECEA25Z47	E.CAPACITOR	25V	4.7U	1	
C2524		ECQV1H274JZ	P.CAPACITOR	50V	0.27U	1	
C2801		ECEA1HK010	E.CAPACITOR	50V	1U	1	
C2802		VCYD1E223KR	S.CAPACITOR	25V	0.022U	1	
C2803		ECEA0JK470	E.CAPACITOR	6.3V	47U	1	

Ref.No.		Part No.	Part Name & Description			Pcs	Remarks
C2804		ECUM1H181KN	CHIP	50V	180P	1	
C2805		ECEA1HKN010	E.CAPACITOR	50V	1U	1	
C2806		ECUM1H220JCN	CHIP	50V	22P	1	
C2807		ECEA0JK470	E.CAPACITOR	6.3V	47U	1	
C2808		ECQV1H124JZ	P.CAPACITOR	50V	0.12U	1	
C2809		ECEA1EK4R7	E.CAPACITOR	25V	4.7U	1	
C2812,13		ECQV1H224JZ	P.CAPACITOR	50V	0.22U	2	
C2918		ECQV1H104JZ	P.CAPACITOR	50V	0.1U	1	
C3001		ECEA1CK470	E.CAPACITOR	16V	47U	1	
C3002		ECEA0JU471	E.CAPACITOR	6.3V	470U	1	
C3003,04		ECUM1H332KBN	CHIP	50V	3300P	2	
C3007		ECEA1CK100	E.CAPACITOR	16V	10U	1	
C3010		ECUM1H151JCN	CHIP	50V	150P	1	
C3011		ECUM1H270JCN	CHIP	50V	27P	1	
C3012		ECUM1H681JN	CHIP	50V	680P	1	
C3013		ECEA1HKN010	E.CAPACITOR	50V	1U	1	
C3014		ECUM1H150JCN	CHIP	50V	15P	1	
C3015		VCYD1C104MR1	S.CAPACITOR	16V	0.1U	1	
C3016		ECEA0JK470	E.CAPACITOR	6.3V	47U	1	
C3019		ECUM1H220JCN	CHIP	50V	22P	1	
C3050		ECEA1CK100	E.CAPACITOR	16V	10U	1	
C3051		ECEA1CK470	E.CAPACITOR	16V	47U	1	
C3053		ECEA0JK101	E.CAPACITOR	6.3V	100U	1	
C3054		ECEA0JK470	E.CAPACITOR	6.3V	47U	1	
C3055		ECEA1CK330	E.CAPACITOR	16V	33U	1	
C3056		ECEA1CK470	E.CAPACITOR	16V	47U	1	
C3057		ECQB1H103JH	P.CAPACITOR	50V	0.01U	1	
C3058		ECQB1H392JH	P.CAPACITOR	50V	3900P	1	
C3059		ECQB1H562JH	P.CAPACITOR	50V	5600P	1	
C3060		ECUM1H103ZFN	CHIP	50V	0.01U	1	
C3061		ECQB1H272JH	P.CAPACITOR	50V	2700P	1	
C3062,63		ECEA1HK010	E.CAPACITOR	50V	1U	2	
C3064		ECQB1H103JH	P.CAPACITOR	50V	0.01U	1	
C3067,68		ECUM1H103ZFN	CHIP	50V	0.01U	2	
C3070		ECUM1H103ZFN	CHIP	50V	0.01U	1	
C3073		ECCF1H390JC	C.CAPACITOR	50V	39P	1	
C3074		ECEA1CK470	E.CAPACITOR	16V	47U	1	
C3075		ECQV1H104JZ	P.CAPACITOR	50V	0.1U	1	
C3077		ECQV1H104JZ	P.CAPACITOR	50V	0.1U	1	
C4001		ECQB1H153JH	P.CAPACITOR	50V	0.015U	1	
C4002		ECEA16Z33	E.CAPACITOR	16V	33U	1	
C4003		ECKF1H102ZF	C.CAPACITOR	50V	1000P	1	
C4004		ECQP1332JZ	M.CAPACITOR	100V	3300P	1	
C4005		ECCD2H121K	C.CAPACITOR	500V	120P	1	
C4006		ECEA1CK470	E.CAPACITOR	16V	47U	1	
C4007		ECEA1CK330	E.CAPACITOR	16V	33U	1	
C4008		ECEA1HK010	E.CAPACITOR	50V	1U	1	
C4009		ECEA1EK4R7	E.CAPACITOR	25V	4.7U	1	
C4011		ECQB1H123JH	P.CAPACITOR	50V	0.012U	1	
C4012		ECEA1CK100	E.CAPACITOR	16V	10U	1	
C4013		ECUM1H471KBN	CHIP	50V	470P	1	
C4015		ECEA1CKL100	E.CAPACITOR	16V	10U	1	
C4016		ECUM1H102KBN	CHIP	50V	1000P	1	
C4017		ECEA16M10	ELECTROLYTIC	16V	10U	1	
C4018		ECQB1H123JH	P.CAPACITOR	50V	0.012U	1	
C4019		ECEA1CK100	E.CAPACITOR	16V	10U	1	
C4020		ECUM1H102KBN	CHIP	50V	1000P	1	
C4021		ECEA1AK470	E.CAPACITOR	10V	47U	1	
C4022		ECUM1H102KBN	CHIP	50V	1000P	1	
C4023		ECUX1H221JCN	CHIP	50V	220P	1	
C4024,25		ECUM1H101JCN	CHIP	50V	100P	2	
C4032		VCYD1C104MR1	S.CAPACITOR	16V	0.1U	1	
C4038		ECEA1CK100	E.CAPACITOR	16V	10U	1	
C4039		VCYD1E103KR	S.CAPACITOR	25V	0.01U	1	
C6001		ECEA0JK220	E.CAPACITOR	6.3V	22U	1	
C6002		VCYD1C103MR1	S.CAPACITOR	16V	0.01U	1	
C6003		ECUM1H103ZFN	CHIP	50V	0.01U	1	
C6006		ECEA0JK330	E.CAPACITOR	6.3V	33U	1	
C6007		VCYD1C104MR1	S.CAPACITOR	16V	0.1U	1	
C6013		ECEA1CK330	E.CAPACITOR	16V	33U	1	
C6017-19		ECEA0JK470	E.CAPACITOR	6.3V	47U	3	
C6020		ECUM1H103KBN	CHIP	50V	0.01U	1	
C6023		ECUM1H103ZFN	CHIP	50V	0.01U	1	
C6024-26		ECUM1H271KBN	CHIP	50V	270P	3	
C6027		ECEA1HKR47	E.CAPACITOR	50V	0.47U	1	

To guarantee the FUNCTION,SAFETY and RELIABLITY of repaired units,only use ORIGINAL REPLACEMENT PARTS which are listed with their part numbers in this parts list section.

Ref.No.		Part No.	Part Name & Description	Pcs	Remarks
C6028		ECUM1H102KBN	CHIP 50V 1000P	1	
C6029		ECUM1H103ZFN	CHIP 50V 0.01U	1	
C7551		ECQV1H104JZ	P.CAPACITOR 50V 0.1U	1	
C7552		ECQV1H683JZ	P.CAPACITOR 50V 0.068U	1	
C7553		ECQV1H823JZ	P.CAPACITOR 50V 0.082U	1	
C7554		ECQB1H273JH	P.CAPACITOR 50V 0.027U	1	
C7555,56		ECUM1H103ZFN	CHIP 50V 0.01U	2	
C7557		ECEA1HKA100	E.CAPACITOR 50V 10U	1	
C7558		ECUM1H103ZFN	CHIP 50V 0.01U	1	
C7559		ECEA1CK100	E.CAPACITOR 16V 10U	1	
C7560		ECUM1H103ZFN	CHIP 50V 0.01U	1	
C7564		ECEA1HKN010	E.CAPACITOR 50V 1U	1	
C7565		ECUM1H103ZFN	CHIP 50V 0.01U	1	
C7569		ECEA1HKN010	E.CAPACITOR 50V 1U	1	
C7571		EECS5R5V473	E.CAPACITOR 5.5V 0.047	1	
C7590		ECEA0JU221	E.CAPACITOR 6.3V 220U	1	
C7591		ECUM1H102KBN	CHIP 50V 1000P	1	
			DIODES		
D301		MA4091M	DIODE	1	
D710		MA3100L	DIODE	1	
D712		MA28W	DIODE	1	
D1101		MA165	DIODE	1	
D2007		MA165	DIODE	1	
D2014		MA165	DIODE	1	
D2101-05		MA165	DIODE	5	
D2801-04		MA165	DIODE	4	
D3008,09		MA165	DIODE	2	
D3011		MA165	DIODE	1	
D4001		MA165	DIODE	1	
D4050		MA165	DIODE	1	
D6001		ERA15-01	DIODE	1	
D6002		MA165	DIODE	1	
D6004		MA165	DIODE	1	
D6017		ERA15-01	DIODE	1	
D6019		MA4150M	DIODE	1	
D6023,24		MA165	DIODE	2	
D6028,29		MA165	DIODE	2	
D6030		MA4056L	DIODE	1	
D6032		MA165	DIODE	1	
D7551-53		MA165	DIODE	3	
			DELAY		
DL802		VLD0148	DELAY	1	
			FILTERS		
FL301		ELB4M022	FILTER	1	
FL302		VLF0499	FILTER	1	
FL303		VLF0567	FILTER	1	
FL801		VLF0299	FILTER	1	
			ICS		
IC301		VEFH03D	HIC	1	
IC303		MSM6965-3RS	IC	1	
IC701		M51366SP	IC	1	
IC801		VEFH04A	HIC	1	
IC2101		UPD6160CA606	IC	1	
IC2102		MN15312VPL	IC	1	
IC2103,04		AN6562	IC	2	
IC2105		UPD4069UBC	IC	1	
IC2501		BA6432S	IC	1	
IC2801		BA6305	IC	1	
IC2802		MC14013BCP	IC	1	
IC2803		LM393P	IC	1	
IC3001		BA7004	IC	1	
IC3002		AN5421N	IC	1	
IC4001		BA7766S	IC	1	
IC6001		MN15362VPD	IC	1	
IC6002		AN6914	IC	1	
IC6003		MN4510B	IC	1	
IC6004		MN12821	IC	1	(R)

Ref.No.		Part No.	Part Name & Description	Pcs	Remarks
IC7551		AN5043	IC	1	
IC7552		AN6913	IC	1	
IC7553		MN4066B	IC	1	
			COILS		
L301		VLQEL05F101K	COIL 100UH	1	
L302		VLQEL05F220K	COIL 22UH	1	
L303,04		VLQEL05F101K	COIL 100UH	2	
L306		VLQEL05F101K	COIL 100UH	1	
L307		VLQEL05F151K	COIL 150UH	1	
L308		VLQEL05F270K	COIL 27UH	1	
L309,10		VLQEL05F101K	COIL 100UH	2	
L311		VLQEL05F2R2K	COIL 2.2UH	1	
L702		ELESP680KA	COIL 68UH	1	
L711		VLQ0305J1R2	COIL 1.2UH	1	
L712		VLQ0305JR82T	COIL 0.82UH	1	
L713		VLQ0305JR56T	COIL 0.56UH	1	
L714		VLQ0305J1R2	COIL 1.2UH	1	
L715		VLQ0213K680	COIL 68UH	1	
L717,18		ELESP680KA	COIL 68UH	2	
L719		ELESP120KA	COIL 12UH	1	
L781		ELESP330KA	COIL 33H	1	
L804		VLQEL05F150K	COIL 15UH	1	
L805		VLQEL05F101K	COIL 100UH	1	
L806		VLQEL05F681K	COIL 680UH	1	
L808		VLQEL05F470K	COIL 47UH	1	
L809		VLQEL05F331K	COIL 330UH	1	
L810		VLQEL05F101K	COIL 100UH	1	
L811		VLQEL05F470K	COIL 47UH	1	
L812		VLQEL05F681K	COIL 680UH	1	
L2501		VLQEL05F102K	COIL 1000UH	1	
L2502		VLQ0128	COIL 47UH	1	
L3001-03		VLQEL05F101K	COIL 100UH	3	
L3005		VLQEL05F120K	COIL 12UH	1	
L3006		VLQEL05F5R6K	COIL 5.6UH	1	
L3007		VLQEL05F101K	COIL 100UH	1	
L3008		VLQEL05F3R3K	COIL 3.3UH	1	
L3012		VLQEL05F101K	COIL 100UH	1	
L3013		VLQEL05F390K	COIL 39UH	1	
L3014		VLQEL05F470K	COIL 47UH	1	
L4001		VLQEL07F822J	COIL 8200UH	1	
L4002		VLQEL05F471K	COIL 470UH	1	
L7551		VLQEL05F680K	COIL 68UH	1	
			CONNECTORS		
P006		VJS1902	CONNECTOR (FEMALE)	1	
P501		VJF0171T	CONNECTOR	1	
P1001		VJS1931T	CONNECTOR (FEMALE)	1	
P1101		VJP1931T	CONNECTOR (MALE)	1	
P2001		VJP1232T	CONNECTOR(MALE) 5P	1	
P2002		VJP1932T	CONNECTOR (MALE)	1	
P2801		VJP1244T	CONNECTOR(MALE) 4P	1	
P2901		VJS1232T	CONNECTOR (FEMALE)	1	
P3001		VJP1393T	CONNECTOR(MALE) 13P	1	
P3002		VJP1237T	CONNECTOR(MALE) 10P	1	
P4001		VJP1233T	CONNECTOR(MALE) 6P	1	
P6001		VJS2157W	CONNECTOR (FEMALE)	1	
P6002		VJS2149W	CONNECTOR (FEMALE)	1	
P6003		VJP1236T	CONNECTOR(MALE) 9P	1	
P6004		VJP1231T	CONNECTOR(MALE) 4P	1	
P6005		VJP1231T	CONNECTOR(MALE) 4P	1	
P6202		VJS1236T	CONNECTOR (FEMALE)	1	
P7401		VJS1475	CONNECTOR(FEMALE)	1	
P7402		VJS2157W	CONNECTOR (FEMALE)	1	
P9501		VJS1237T	CONNECTOR	1	
P9502		VJS1231T	CONNECTOR (FEMALE)	1	
			TRANSISTORS		
Q301		2SB709	TRANSISTOR CHIP	1	
Q302,03		2SC2295	TRANSISTOR CHIP	2	(B,C)
Q304		2SD601	TRANSISTOR CHIP	1	(Q,R,S)
Q703		2SD601	TRANSISTOR	1	(S,T)

To guarantee the FUNCTION,SAFETY and RELIABLITY of repaired units,only use ORIGINAL REPLACEMENT PARTS which are listed with their part numbers in this parts list section.

Ref.No.		Part No.	Part Name & Description	Pcs	Remarks
Q710		2SC2377	TRANSISTOR	1	(C,D)
Q712		2SD638	TRANSISTOR	1	
Q713		2SD1328	TRANSISTOR	1	
Q714		2SD601	TRANSISTOR CHIP	1	
Q771		2SD601	TRANSISTOR CHIP	1	
Q804		2SB709	TRANSISTOR CHIP	1	
Q2001		2SB709	TRANSISTOR CHIP	1	
Q2002-04		2SD601	TRANSISTOR CHIP	3	
Q2006		2SD1330	TRANSISTOR	1	(S,T)
Q2108		2SD601	TRANSISTOR CHIP	1	
Q2111,12		2SD601	TRANSISTOR CHIP	2	
Q2801		2SD601	TRANSISTOR CHIP	1	
Q2802		2SB709	TRANSISTOR CHIP	1	
Q2803-06		2SD601	TRANSISTOR CHIP	4	
Q3002		2SC2295	TRANSISTOR	1	
Q3005		2SD601	TRANSISTOR CHIP	1	
Q3006		2SC2295	TRANSISTOR	1	
Q3007		2SB641	TRANSISTOR	1	
Q3011		2SB709	TRANSISTOR CHIP	1	
Q3013		2SD601	TRANSISTOR CHIP	1	
Q3014		2SA564	TRANSISTOR	1	(P,Q,R)
Q4001		2SD602	TRANSISTOR	1	(R)
Q6006		2SB641	TRANSISTOR	1	
Q6007		2SB643	TRANSISTOR	1	
Q6009		2SB643	TRANSISTOR	1	(R,S)
Q6016		2SD1275	TRANSISTOR	1	(P,Q)
Q6017		2SD893	TRANSISTOR	1	
Q6018		2SD973	TRANSISTOR	1	(S)
Q6019		2SD638	TRANSISTOR	1	
Q6020		2SD973	TRANSISTOR	1	(S)
			COMBINATION PARTS		
QR701,02		UN2213	TRANSISTOR-RESISTOR	2	
QR713		UN2211	TRANSISTOR-RESISTOR	1	
QR1101		UN2213	TRANSISTOR-RESISTOR	1	
QR2002		UN2212	TRANSISTOR-RESISTOR	1	
QR2007		UN2213	TRANSISTOR-RESISTOR	1	
QR2101,02		UN2113	TRANSISTOR-RESISTOR	2	
QR2103		UN2212	TRANSISTOR-RESISTOR	1	
QR2104		UN2110	TRANSISTOR-RESISTOR	1	
QR2105		UN2117	TRANSISTOR-RESISTOR	1	
QR2106		UN2115	TRANSISTOR-RESISTOR	1	
QR2107		UN2110	TRANSISTOR-RESISTOR	1	
QR2801,02		UN2213	TRANSISTOR-RESISTOR	2	
QR2804		UN2211	TRANSISTOR-RESISTOR	1	
QR3004		UN2111	TRANSISTOR-RESISTOR	1	
QR3011		UN2212	TRANSISTOR-RESISTOR	1	
QR4006		UN1112	TRANSISTOR-RESISTOR	1	
QR4007		UN2211	TRANSISTOR-RESISTOR	1	
QR6001		UN2212	TRANSISTOR-RESISTOR	1	
QR6005		UN2213	TRANSISTOR-RESISTOR	1	
QR6006		UN2111	TRANSISTOR-RESISTOR	1	
QR6008		UN2119	TRANSISTOR-RESISTOR	1	
QR6011		UN2212	TRANSISTOR-RESISTOR	1	
QR6012		UN2113	TRANSISTOR-RESISTOR	1	
QR7551-54		UN2213	TRANSISTOR-RESISTOR	4	
QR7561		UN2211	TRANSISTOR-RESISTOR	1	
			RESISTORS		
R301		ERJ6GMYJ122	CHIP 1/16W 1.2K	1	
R302		ERJ6GMYJ391	CHIP 1/16W 390	1	
R303		ERJ6GMYJ103	CHIP 1/16W 10K	1	
R304		ERJ6GMYJ102	CHIP 1/16W 1K	1	
R305		ERJ6GMYJ824	CHIP 1/16W 820K	1	
R306		ERJ6GMYJ152	CHIP 1/16W 1.5K	1	
R307		ERJ6GMYJ102	CHIP 1/16W 1K	1	
R308		ERJ6GMYJ123	CHIP 1/16W 12K	1	
R309		ERJ6GMYJ272	CHIP 1/16W 2.7K	1	
R310		ERJ6GMYJ103	CHIP 1/16W 10K	1	
R311		ERJ6GMYJ272	CHIP 1/16W 2.7K	1	
R312		ERJ6GMYJ222	CHIP 1/16W 2.2K	1	
R316		ERJ6GMYJ104	CHIP 1/16W 100K	1	

Ref.No.		Part No.	Part Name & Description	Pcs	Remarks
R317		ERJ6GMYJ471	CHIP 1/16W 470	1	
R325		ERJ6GMYJ151	CHIP 1/16W 150	1	
R326		ERJ6GMYJ822	CHIP 1/16W 8.2K	1	
R327		ERJ6GMYJ332	CHIP 1/16W 3.3K	1	
R328		ERJ6GMYJ272	CHIP 1/16W 2.7K	1	
R329		ERJ6GMYJ103	CHIP 1/16W 10K	1	
R330		ERJ6GMYJ183	CHIP 1/16W 18K	1	
R331		ERJ6GMYJ102	CHIP 1/16W 1K	1	
R332		ERJ6GMYJ222	CHIP 1/16W 2.2K	1	
R334,35		ERJ6GMYJ102	CHIP 1/16W 1K	2	
R338		ERJ6GMYJ474	M.RESISTOR CH1/16W 470K	1	
R339		ERJ6GMYJ101	CHIP 1/16W 100	1	
R707		ERJ6GEYJ103	CHIP 1/16W 10K	1	
R712		ERJ6GEYJ682	CHIP 1/16W 6.8K	1	
R713		ERJ6GEYJ681	CHIP 1/16W 680	1	
R714		ERD2FCG330	C.RESISTOR 2W 33	1	<!>
R715		ERJ6GEYJ271	CHIP 1/16W 270	1	
R716		ERJ6GEYJ272	CHIP 1/16W 2.7K	1	
R717		ERJ6GEYJ332	CHIP 1/16W 3.3K	1	
R718		ERJ6GEYJ754	CHIP 1/16W 750K	1	
R719		ERJ6GEYJ682	CHIP 1/16W 6.8K	1	
R720		ERJ6GEYJ822	CHIP 1/16W 8.2K	1	
R721		ERJ6GEYJ332	CHIP 1/16W 3.3K	1	
R723		ERJ6GEYJ183	CHIP 1/16W 180K	1	
R724		ERJ6GEYJ101	CHIP 1/16W 100	1	
R725		ERJ6GEYJ182	CHIP 1/16W 1.8K	1	
R726		ERJ6GEYJ472	CHIP 1/16W 4.7K	1	
R727		ERJ6GEYJ471	CHIP 1/16W 470	1	
R728		VRE0040E471T	V.RESISTOR 470	1	
R729,30		ERJ6GEYJ331	CHIP 1/16W 330	2	
R737		ERJ6GEYJ274	CHIP 1/16W 270K	1	
R738		ERJ6GEYJ334	CHIP 1/16W 330K	1	
R739		ERJ6GEYJ681	CHIP 1/16W 680	1	
R740		ERJ6GEYJ473	CHIP 1/16W 47K	1	
R741,42		ERJ6GEYJ272	CHIP 1/16W 2.7K	2	
R743		ERJ6GEYJ470	CHIP 1/16W 47	1	
R744		ERJ6GEYJ821	CHIP 1/16W 820	1	
R745		ERJ6GEYJ331	CHIP 1/16W 330	1	
R746		VRE0040E181T		1	
R750		ERJ6GEYJ182	CHIP 1/16W 1.8K	1	
R757		ERJ6GEYJ222	CHIP 1/16W 2.2K	1	
R759		ERJ6GEYJ103	CHIP 1/16W 10K	1	
R760		ERJ6GEYJ102	CHIP 1/16W 1K	1	
R763		ERJ6GEYJ103	CHIP 1/16W 10K	1	
R764		ERJ6GEYJ822	CHIP 1/16W 8.2K	1	
R772		ERJ6GEYJ102	CHIP 1/16W 1K	1	
R773		ERJ6GEYJ103	CHIP 1/16W 10K	1	
R781		ERJ6GEYJ681	CHIP 1/16W 680	1	
R782		ERJ6GEYJ471	CHIP 1/16W 470	1	
R792		ERJ6GEYJ120	CHIP 1/16W 12	1	
R815		ERJ6GMYJ103	CHIP 1/16W 10K	1	
R816		ERJ6GMYJ822	CHIP 1/16W 8.2K	1	
R818		ERJ6GMYJ102	CHIP 1/16W 1K	1	
R819		ERJ6GMYJ182	CHIP 1/16W 1.8K	1	
R820		ERJ6GMYJ222	CHIP 1/16W 2.2K	1	
R821,22		ERJ6GMYJ103	CHIP 1/16W 10K	2	
R823		ERJ6GMYJ271	CHIP 1/16W 270	1	
R824		ERJ6GMYJ102	CHIP 1/16W 1K	1	
R825		ERJ6GMYJ182	CHIP 1/16W 1.8K	1	
R826		ERJ6GMYJ681	CHIP 1/16W 680	1	
R1101		ERJ6GMYJ561	CHIP 1/16W 560	1	
R2007		ERJ6GMYJ472	CHIP 1/16W 4.7K	1	
R2008		ERJ6GMYJ682	CHIP 1/16W 6.8K	1	
R2009		ERJ6GMYJ472	CHIP 1/16W 4.7K	1	
R2010		ERJ6GMYJ223	CHIP 1/16W 22K	1	
R2011		ERJ6GMYJ561	CHIP 1/16W 560	1	
R2029		ERJ6GMYJ683	CHIP 1/16W 68K	1	
R2030		ERJ6GMYJ333	CHIP 1/16W 33K	1	
R2031		ERJ6GMYJ473	CHIP 1/16W 47K	1	
R2032		ERJ6GMYJ124	CHIP 1/16W 120K	1	
R2033		ERJ6GMYJ683	CHIP 1/16W 68K	1	
R2034		ERJ6GMYJ391	CHIP 1/16W 390	1	
R2037		ERJ6GMYJ103	CHIP 1/16W 10K	1	
R2038		ERJ6GMYJ104	CHIP 1/16W 100K	1	
R2046		ERJ6GMYJ153	CHIP 1/16W 15K	1	

To guarantee the FUNCTION,SAFETY and RELIABLITY of repaired units,only use ORIGINAL REPLACEMENT PARTS which are listed with their part numbers in this parts list section.

Ref.No.		Part No.	Part Name & Description	Pcs	Remarks
R2047,48		ERJ6GMYJ154	CHIP 1/16W 150K	2	
R2049		ERJ6GMYJ273	CHIP 1/16W 27K	1	
R2050		ERJ6GMYJ102	CHIP 1/16W 1K	1	
R2051		ERJ6GMYJ222	CHIP 1/16W 2.2K	1	
R2054		ERJ6GMYOR00	CHIP 1/16W 0	1	
R2056		ERDS2TJ471	C.RESISTOR 1/4W 470	1	
R2106		ERJ6GMYJ392	CHIP 1/16W 3.9K	1	
R2108		ERJ6GMYJ222	CHIP 1/16W 2.2K	1	
R2109		ERJ6GMYJ682	CHIP 1/16W 6.8K	1	
R2110		ERJ6GMYJ274	CHIP 1/16W 270K	1	
R2111		ERJ6GMYJ563	CHIP 1/16W 56K	1	
R2112,13		ERJ6GMYJ154	CHIP 1/16W 150K	2	
R2114		ERJ6GMYJ224	CHIP 1/16W 220K	1	
R2115		ERJ6GMYJ272	CHIP 1/16W 2.7K	1	
R2117		ERJ6GMYJ683	CHIP 1/16W 68K	1	
R2119		ERJ6GMYJ333	CHIP 1/16W 33K	1	
R2120		ERJ6GMYJ274	CHIP 1/16W 270K	1	
R2121		ERJ6GMYOR00	CHIP 1/16W 0	1	
R2122,23		ERJ6GMYJ332	CHIP 1/16W 3.3K	2	
R2124		ERJ6GMYJ561	CHIP 1/16W 560	1	
R2125		ERJ6GMYJ222	CHIP 1/16W 2.2K	1	
R2131		ERJ6GMYJ152	CHIP 1/16W 1.5K	1	
R2132,33		ERJ6GMYJ563	CHIP 1/16W 56K	2	
R2134		ERJ6GMYJ472	CHIP 1/16W 4.7K	1	
R2135		ERJ6GMYJ333	CHIP 1/16W 33K	1	
R2136,37		ERJ6GMYJ154	CHIP 1/16W 150K	2	
R2138		ERJ6GMYJ124	CHIP 1/16W 120K	1	
R2139		ERJ6GMYJ392	CHIP 1/16W 3.9K	1	
R2140		ERJ6GMYG333	CHIP 1/16W 33K	1	
R2141		ERJ6GMYJ684	CHIP 1/16W 680K	1	
R2142		ERJ6GMYJ154	CHIP 1/16W 150K	1	
R2143		ERJ6GMYJ683	CHIP 1/16W 68K	1	
R2144,45		ERJ6GMYJ223	CHIP 1/16W 22K	2	
R2146		ERJ6GMYJ103	CHIP 1/16W 10K	1	
R2147		ERJ6GMYJ392	CHIP 1/16W 3.9K	1	
R2148		ERJ6GMYJ223	CHIP 1/16W 22K	1	
R2149		ERJ6GMYG472	M.RESISTOR CH1/16W 4.7K	1	
R2150		ERJ6GMYJ821	CHIP 1/16W 820	1	
R2151		ERJ6GMYJ824	CHIP 1/16W 820K	1	
R2153		ERJ6GMYJ684	CHIP 1/16W 680K	1	
R2156		ERJ6GMYJ123	CHIP 1/16W 12K	1	
R2157		ERJ6GMYJ562	CHIP 1/16W 5.6K	1	
R2158		ERJ6GMYJ683	CHIP 1/16W 68K	1	
R2159,60		ERJ6GMYJ223	CHIP 1/16W 22K	2	
R2161		ERJ6GMYJ183	CHIP 1/16W 18K	1	
R2166,67		ERJ6GMYJ563	CHIP 1/16W 56K	2	
R2168,69		ERJ6GMYJ562	CHIP 1/16W 5.6K	2	
R2174		ERJ6GMYJ103	CHIP 1/16W 10K	1	
R2175		ERJ6GMYJ334	CHIP 1/16W 330K	1	
R2177		ERJ6GMYJ681	CHIP 1/16W 680	1	
R2178		ERJ6GMYJ104	CHIP 1/16W 100K	1	
R2179		ERJ6GMYJ683	CHIP 1/16W 68K	1	
R2181		ERJ6GMYJ472	CHIP 1/16W 4.7K	1	
R2182		ERJ6GMYJ473	CHIP 1/16W 47K	1	
R2183		ERJ6GMYJ103	CHIP 1/16W 10K	1	
R2184		ERJ6GMYJ102	CHIP 1/16W 1K	1	
R2185		ERJ6GMYJ223	CHIP 1/16W 22K	1	
R2186,87		ERJ6GMYJ222	CHIP 1/16W 2.2K	2	
R2188		ERJ6GMYJ223	CHIP 1/16W 22K	1	
R2189		ERJ6GMYJ222	CHIP 1/16W 2.2K	1	
R2190		ERJ6GMYJ821	CHIP 1/16W 820	1	
R2191		ERJ6GMYJ105	CHIP 1/16W 1M	1	
R2192		ERJ6GMYJ472	CHIP 1/16W 4.7K	1	
R2501-03		ERDS2TJ330	C.RESISTOR 1/4W 33	3	
R2504		ERDS1TJ1R0	C.RESISTOR 1/2W 1.0	1	
R2505		ERJ6GMYJ102	CHIP 1/16W 1K	1	
R2506		ERJ6GMYG512	CHIP 1/16W 5.1K	1	
R2518		ERJ6GMYJ330	CHIP 1/16W 33	1	
R2801,02		ERJ6GMYJ103	CHIP 1/16W 10K	2	
R2803		ERJ6GMYJ561	CHIP 1/16W 560	1	
R2804		ERJ6GMYJ393	CHIP 1/16W 39K	1	
R2805		ERJ6GMYJ332	CHIP 1/16W 3.3K	1	
R2806		ERJ6GMYJ221	CHIP 1/16W 220	1	
R2807		ERJ6GMYJ823	M.RESISTOR CH1/16W 82K	1	
R2808		ERJ6GMYJ103	CHIP 1/16W 10K	1	

Ref.No.		Part No.	Part Name & Description	Pcs	Remarks
R2809		ERJ6GMYJ750	CHIP 1/16W 75	1	
R2810		ERJ6GMYJ124	CHIP 1/16W 120K	1	
R2811		ERJ6GMYG113	M.RESISTOR CH1/16W 11K	1	
R2812		ERJ6GMYJ153	CHIP 1/16W 15K	1	
R2813		ERJ6GMYJ221	CHIP 1/16W 220	1	
R2814		ERJ6GMYJ102	CHIP 1/16W 1K	1	
R2815,16		ERJ6GMYJ473	CHIP 1/16W 47K	2	
R2817		ERJ6GMYJ223	CHIP 1/16W 22K	1	
R2818		ERJ6GMYJ102	CHIP 1/16W 1K	1	
R2819		ERJ6GMYJ124	CHIP 1/16W 120K	1	
R2820		ERJ6GMYJ221	CHIP 1/16W 220	1	
R2821		ERJ6GMYJ103	CHIP 1/16W 10K	1	
R2822		ERJ6GMYJ124	CHIP 1/16W 120K	1	
R2823		ERJ6GMYJ473	CHIP 1/16W 47K	1	
R2824		ERJ6GMYJ103	CHIP 1/16W 10K	1	
R2825		ERJ6GMYJ473	CHIP 1/16W 47K	1	
R2831		ERJ6GMYJ272	CHIP 1/16W 2.7K	1	
R2832		ERJ6GMYJ822	CHIP 1/16W 8.2K	1	
R2833		ERJ6GMYJ103	CHIP 1/16W 10K	1	
R3001,02		ERJ6GMYJ103	CHIP 1/16W 10K	2	
R3006		ERJ6GMYJ473	CHIP 1/16W 47K	1	
R3009		ERJ6GMYJ152	CHIP 1/16W 1.5K	1	
R3010		ERJ6GMYJ392	CHIP 1/16W 3.9K	1	
R3011		ERJ6GMYJ102	CHIP 1/16W 1K	1	
R3022,23		ERJ6GMYJ821	CHIP 1/16W 820	2	
R3028		ERJ6GMYJ102	CHIP 1/16W 1K	1	
R3029		ERJ6GMYJ272	CHIP 1/16W 2.7K	1	
R3030		ERJ6GMYJ750	CHIP 1/16W 75	1	
R3032		ERJ6GMYJ104	CHIP 1/16W 100K	1	
R3033		ERJ6GMYJ183	CHIP 1/16W 18K	1	
R3034		ERJ6GMYJ333	CHIP 1/16W 33K	1	
R3035		ERJ6GMYJ222	CHIP 1/16W 2.2K	1	
R3036		ERJ6GMYJ183	CHIP 1/16W 18K	1	
R3040		ERJ6GMYJ750	CHIP 1/16W 75	1	
R3042		ERJ6GMYJ102	CHIP 1/16W 1K	1	
R3050,51		ERJ6GMYJ750	CHIP 1/16W 75	2	
R3054		ERJ6GMYOR00	CHIP 1/16W 0	1	
R3055		ERJ6GMYJ101	CHIP 1/16W 100	1	
R3056		ERJ6GMYJ152	CHIP 1/16W 1.5K	1	
R3062		ERJ6GMYJ223	CHIP 1/16W 22K	1	
R3063		ERJ6GMYJ332	CHIP 1/16W 3.3K	1	
R3064		ERJ6GMYJ152	CHIP 1/16W 1.5K	1	
R3065		ERJ6GMYJ561	CHIP 1/16W 560	1	
R3066		ERJ6GMYJ222	CHIP 1/16W 2.2K	1	
R3067		ERJ6GMYJ472	CHIP 1/16W 4.7K	1	
R3068		ERJ6GMYJ562	CHIP 1/16W 5.6K	1	
R3069		ERJ6GMYJ151	CHIP 1/16W 150	1	
R3070		ERJ6GMYJ562	CHIP 1/16W 5.6K	1	
R3071		ERJ6GMYJ104	CHIP 1/16W 100K	1	
R3072		ERJ6GMYJ393	CHIP 1/16W 39K	1	
R3073		ERJ6GMYJ222	CHIP 1/16W 2.2K	1	
R3074		ERJ6GMYJ822	CHIP 1/16W 8.2K	1	
R3075		ERJ6GMYJ332	CHIP 1/16W 3.3K	1	
R3076		ERJ6GMYJ393	CHIP 1/16W 39K	1	
R3077		ERJ6GMYJ122	CHIP 1/16W 1.2K	1	
R3081		ERJ6GMYJ273	CHIP 1/16W 27K	1	
R3084		ERJ6GMYJ222	CHIP 1/16W 2.2K	1	
R3085		ERJ6GMYJ221	CHIP 1/16W 220	1	
R3087,88		ERJ6GMYJ222	CHIP 1/16W 2.2K	2	
R4001		ERJ6GMYJ183	CHIP 1/16W 18K	1	
R4002		ERJ6GMYJ100	CHIP 1/16W 10	1	
R4003		ERJ6GMYJ203	CHIP 1/16W 2K	1	
R4004		ERJ6GMYJ562	CHIP 1/16W 5.6K	1	
R4005		ERJ6GMYOR00	CHIP 1/16W 0	1	
R4006		ERJ6GMYJ151	CHIP 1/16W 150	1	
R4007		ERJ6GMYJ221	CHIP 1/16W 220	1	
R4008		ERJ6GMYJ122	CHIP 1/16W 1.2K	1	
R4009		ERJ6GMYJ104	CHIP 1/16W 100K	1	
R4010		ERJ6GMYJ683	CHIP 1/16W 68K	1	
R4012		ERJ6GMYJ331	CHIP 1/16W 330	1	
R4013		ERJ6GMYJ334	CHIP 1/16W 330K	1	
R4014		ERJ6GMYJ103	CHIP 1/16W 10K	1	
R4015		ERJ6GMYOR00	CHIP 1/16W 0	1	
R4016		ERJ6GMYJ105	CHIP 1/16W 1M	1	
R4017		ERJ6GMYJ272	CHIP 1/16W 2.7K	1	

To guarantee the FUNCTION,SAFETY and RELIABLITY of repaired units,only use ORIGINAL REPLACEMENT PARTS which are listed with their part numbers in this parts list section.

Ref.No.		Part No.	Part Name & Description	Pcs	Remarks
R4018		ERJ6GMYJ223	CHIP 1/16W 22K	1	
R4019		ERJ6GMYJ562	CHIP 1/16W 5.6K	1	
R4020		ERJ6GMYJ563	CHIP 1/16W 56K	1	
R4021		ERJ6GMYJ562	CHIP 1/16W 5.6K	1	
R4022		ERJ6GMYJ104	CHIP 1/16W 100K	1	
R4023		ERJ6GMYG473	CHIP 1/16W 47K	1	
R4024,25		ERJ6GMYG104	CHIP 1/16W 100K	2	
R4051		ERJ6GMYJ123	CHIP 1/16W 12K	1	
R4052		ERJ6GMYJ153	CHIP 1/16W 15K	1	
R4054		ERJ6GMYJ102	CHIP 1/16W 1K	1	
R4055		ERJ6GMYJ681	CHIP 1/16W 680	1	
R6001		ERDS1TJ470	C.RESISTOR 1/2W 47	1	
R6002		ERJ6GMYJ473	CHIP 1/16W 47K	1	
R6006		ERD2FCVG220	C.RESISTOR 2W 22	1	<!>
R6007		ERJ6GMYJ122	CHIP 1/16W 1.2K	1	
R6008		ERJ6GMYJ181	CHIP 1/16W 180	1	
R6009		ERJ6GMYJ561	CHIP 1/16W 560	1	
R6010		ERJ6GMYJ102	CHIP 1/16W 1K	1	
R6011		ERJ6GMYJ221	CHIP 1/16W 220	1	
R6014		ERJ6GMYJ392	CHIP 1/16W 3.9K	1	
R6017		ERJ6GMYJ223	CHIP 1/16W 22K	1	
R6023		ERJ6GMYJ683	CHIP 1/16W 68K	1	
R6024		ERJ6GMYJ223	CHIP 1/16W 22K	1	
R6027		ERJ6GMYJ223	CHIP 1/16W 22K	1	
R6028		ERJ6GMYJ184	CHIP 1/16W 180K	1	
R6029		ERJ6GMYJ561	CHIP 1/16W 560	1	
R6030,31		ERJ6GMYJ153	CHIP 1/16W 15K	2	
R6032		ERJ6GMYJ332	CHIP 1/16W 3.3K	1	
R6033,34		ERJ6GMYJ333	CHIP 1/16W 33K	2	
R6035-37		ERJ6GMYJ101	CHIP 1/16W 100	3	
R6038		ERJ6GMYJ272	CHIP 1/16W 2.7K	1	
R6041		ERJ6GMYJ391	CHIP 1/16W 390	1	
R6042		ERJ6GMYJ332	CHIP 1/16W 3.3K	1	
R6045		ERJ6GMYJ562	CHIP 1/16W 5.6K	1	
R6046		ERJ6GMYJ152	CHIP 1/16W 1.5K	1	
R6050		ERJ6GMYJ562	CHIP 1/16W 5.6K	1	
R6051		ERJ6GMYJ332	CHIP 1/16W 3.3K	1	
R6060		ERJ6GMYJ822	CHIP 1/16W 8.2K	1	
R6067		ERJ6GMYJ101	CHIP 1/16W 100	1	
R6068		ERDS1TJ332	C.RESISTOR 1/2W 3.3K	1	
R6069		ERJ6GMYJ103	CHIP 1/16W 10K	1	
R6070		ERJ6GMYJ471	CHIP 1/16W 470	1	
R6071		ERJ6GMYJ152	CHIP 1/16W 1.5K	1	
R6072		ERJ6GMYJ562	CHIP 1/16W 5.6K	1	
R6073		ERJ6GMYJ131	CHIP 1/16W 130	1	
R6074		ERJ6GMYJ221	CHIP 1/16W 220	1	
R6075		ERG3SJ220	M.RESISTOR 3W 22	1	
R6079,80		ERJ6GMYJ103	CHIP 1/16W 10K	2	
R6083		ERJ6GMYJ104	CHIP 1/16W 100K	1	
R6084,85		ERJ6GMYJ561	CHIP 1/16W 560	2	
R6087-89		ERJ6GMYJ272	CHIP 1/16W 2.7K	3	
R6090		ERJ6GMYJ821	CHIP 1/16W 820	1	
R6091		ERJ6GMYJ103	CHIP 1/16W 10K	1	
R6093		ERDS2TJ562	C.RESISTOR 1/4W 5.6K	1	
R6095		ERDS2TJ222	C.RESISTOR 1/4W 2.2K	1	
R6096		ERJ6GMYJ681	CHIP 1/16W 680	1	
R6098		ERJ6GMYJ101	CHIP 1/16W 100	1	
R6099		ERJ6GMYJ201	CHIP 1/16W 200	1	
R7551,52		ERJ6GMYJ473	CHIP 1/16W 47K	2	
R7553		ERJ6GMYJ104	CHIP 1/16W 100K	1	
R7554		ERJ6GMYJ124	CHIP 1/16W 120K	1	
R7555		ERJ6GMYJ103	CHIP 1/16W 10K	1	
R7556		ERG1SJ152	M.RESISTOR 1W 1.5K	1	
R7557		ERJ6GMYJ103	CHIP 1/16W 10K	1	
R7558		ERJ6GMYJ332	CHIP 1/16W 3.3K	1	
R7561,62		ERJ6GMYJ473	CHIP 1/16W 47K	2	
R7563		ERJ6GMYJ563	CHIP 1/16W 56K	1	
R7564		ERJ6GMYJ393	CHIP 1/16W 39K	1	
R7565		ERJ6GMYJ103	CHIP 1/16W 10K	1	
R7566		ERJ6GMYJ562	CHIP 1/16W 5.6K	1	
R7567		ERJ6GMYJ682	CHIP 1/16W 6.8K	1	
R7568		ERJ6GMYJ332	CHIP 1/16W 3.3K	1	
R7577		ERDS2TJ100	C.RESISTOR 1/4W 10	1	
R7578		ERJ6GMYJ223	CHIP 1/16W 22K	1	
R7583		ERJ6GMYJ153	CHIP 1/16W 15K	1	

Ref.No.		Part No.	Part Name & Description	Pcs	Remarks
R7595		ERJ6GMYJ181	CHIP 1/16W 180	1	
R7597		ERJ6GMYJ102	CHIP 1/16W 1K	1	
			TRANSFORMERS		
T703		EIV5EC005A	TRANSFORMER	1	
T704		EIV5EC007A	TRANSFORMER	1	
T711		EIS5EC008A	TRANSFORMER	1	
T4001		EIQ7QF014Q	TRANSFORMER	1	
			VARIABLE RESISTORS		
VR302		EVN3AC A00B14	V.RESISTOR 10K	1	
VR701		EVNDRAA00B23	V.RESISTOR 2K	1	
VR741		EVNDRAA00B14	V.RESISTOR 10K	1	
VR751		EVNDRAA00B53	V.RESISTOR 5K	1	
VR803		EVNDXAA00B14	V.RESISTOR 10K	1	
VR2001		EVNDRAA00B54	V.RESISTOR 50K	1	
VR2002		EVNDRAA00B15	V.RESISTOR 100K	1	
VR2010		EVL51MA00B25	V.RESISTOR 200K	1	
VR2011		EVNDRAA00B15	V.RESISTOR 100K	1	
VR2013		EVNDRAA00B23	V.RESISTOR 2K	1	
VR3012		EVNDRAA00B52	V.RESISTOR 500	1	
VR3020		EVN38CA00B23	V.RESISTOR 2K	1	
VR4001		EVNDRAA00B14	V.RESISTOR 10K	1	
VR4002		EVNDRAA00B25	V.RESISTOR 200K	1	
			CRYSTAL OSCILLATOR & FILTER		
X301		VSX0225	CRYSTAL OSCILLATOR	1	
X710		EFCH39MSP3	CRYSTAL OSCILLATOR	1	
X711		EFCS6ROMW5	CRYSTAL OSCILLATOR	1	
X712		EFCS6ROMS5	CRYSTAL OSCILLATOR	1	
X801		VSX0162A	CRYSTAL OSCILLATOR	1	
X3001		VSX0099	CRYSTAL OSCILLATOR	1	
X6001		VSX0204	CRYSTAL OSCILLATOR	1	
X7504		VSQ0565	SENSOR	1	
			MISCELLANEOUS		
		VSC1068	HEAT SINK	1	FOR IC6003
		VWJ0228	FLEXIBLE CABLE 13P	1	P7502-P7401
		VEJ0644	REAR JACK	1	
		ENC87962	RF CONVERTER UNIT	1	<!>
		ENV87806F2	TUNER	1	<!>
		VMC0075	HEAT SINK SPRING	1	FOR IC2501
		VSC1689	HEAT SINK	1	FOR IC2501
		VJF0215	BINDER	1	
		VSC2232	SHIELD CASE (TOP)	1	FOR TV DEMODU.PACK
		VSC2233	SHIELD CASE (MAIN)	1	FOR TV DEMODU.PACK
		VSC2396	SHIELD CASE (BOTTOM)	1	FOR TV DEMODU.PACK
	■	VEP05118B	HEAD AMP C.B.A.		(NLA)
			CAPACITORS		
C501		ECUX1H103ZFN	CHIP 50V 0.01U	1	
C502		ECUX1H820JCN	CHIP 50V 82P	1	
C503		ECUM1H181JN	C.CAPACITOR CH 50V 180P	1	
C504		ECUX1H330JCN	CHIP 50V 33P	1	
C505		ECUX1H103ZFN	CHIP 50V 0.01U	1	
C506		ECUX1E104ZFN	CHIP 25V 0.1U	1	
C507		ECEA1CK100	E.CAPACITOR 16V 10U	1	
C508		ECEA1HK010	E.CAPACITOR 50V 1U	1	
C509		ECUX1E104ZFN	CHIP 25V 0.1U	1	
C512		VCYD1C104MR1	S.CAPACITOR 16V 0.1U	1	
C514		ECEA1CK100	E.CAPACITOR 16V 10U	1	
C515,16		ECUX1E104ZFN	CHIP 25V 0.1U	2	
C517,18		ECEA1CK100	E.CAPACITOR 16V 10U	2	
C519,20		ECUX1E104ZFN	CHIP 25V 0.1U	2	
C521		ECEA1CK100	E.CAPACITOR 16V 10U	1	

To guarantee the FUNCTION,SAFETY and RELIABLITY of repaired units,only use ORIGINAL REPLACEMENT PARTS which are listed with their part numbers in this parts list section.

Ref.No.		Part No.	Part Name & Description	Pcs	Remarks
C522		ECEA1HK010	E.CAPACITOR 50V 1U	1	
C523-26		ECUX1H470JCN	CHIP 50V 47P	4	
C527,28		ECUX1H102KBN	CHIP 50V 1000P	2	
C529		ECUX1H560JCN	CHIP 50V 56P	1	
C531,32		ECUX1H103ZFN	CHIP 50V 0.01U	2	
C533		ECUX1H102KBN	CHIP 50V 1000P	1	
C534		ECUX1E104ZFN	CHIP 25V 0.1U	1	
C535		ECEA0JK470	E.CAPACITOR 6.3V 47U	1	
C539		ECUX1H560JCN	CHIP 50V 56P	1	
C541		ECQV1H104JZ	P.CAPACITOR 50V 0.1U	1	
C542		ECCF1H010CC	C.CAPACITOR 50V 1P	1	
C543		ECQV1H104JZ	P.CAPACITOR 50V 0.1U	1	
			IC		
IC501		BA7254S	IC	1	
			COILS		
L501		VLQEL05F101K	COIL 100UH	1	
L502		VLQEL05F820K	COIL 82UH	1	
L503		VLQEL05F151K	COIL 150UH	1	
L505		VLQEL05F101K	COIL 100UH	1	
L506		VLQEL05F270K	COIL 27UH	1	
			CONNECTORS		
P002		VJS1927	CONNECTOR (FEMALE)	1	
P501		VJP1393T	CONNECTOR(MALE) 13P	1	
			TRANSISTOR		
Q501		2SB709	TRANSISTOR CHIP	1	(Q,R,S)
			RESISTORS		
R501		ERJ6GMYJ561	CHIP 1/16W 560	1	
R502		ERJ6GMYJ102	CHIP 1/16W 1K	1	
R503		ERJ6GMYJ222	CHIP 1/16W 2.2K	1	
R504		ERJ6GMYJ331	CHIP 1/16W 330	1	
R505		ERJ6GMYJ330	CHIP 1/16W 33	1	
R506		ERJ6GMYJ680	CHIP 1/16W 68	1	
R507		ERJ6GMYJ471	CHIP 1/16W 470	1	
R512		ERJ6GMYJ561	CHIP 1/16W 560	1	
R513,14		ERJ6GMY0R00	CHIP 1/16W 0	2	
R515		ERJ6GMYJ561	CHIP 1/16W 560	1	
R516		ERJ6GMYJ821	CHIP 1/16W 820	1	
R517,18		ERJ6GMYJ100	CHIP 1/16W 10	2	
R519		ERJ6GMYJ821	CHIP 1/16W 820	1	
R520		ERJ6GMYJ391	CHIP 1/16W 390	1	
R521		ERJ6GMYJ102	CHIP 1/16W 1K	1	
R522		ERJ6GMYJ204	M.RESISTOR CH1/16W 200K	1	
R523		ERJ6GMYJ223	CHIP 1/16W 22K	1	
R524		ERJ6GMYJ152	CHIP 1/16W 1.5K	1	
R525		ERJ6GMY0R00	CHIP 1/16W 0	1	
R526-29		ERJ6GMYJ222	CHIP 1/16W 2.2K	4	
R531		ERJ6GMY0R00	CHIP 1/16W 0	1	
R532		ERJ6GMYJ392	CHIP 1/16W 3.9K	1	
R533		ERJ6GMYJ821	CHIP 1/16W 820	1	
			VARIABLE RESISTORS		
VR501		EVND1AA00B23	V.RESISTOR 2K	1	
VR502		EVND1AA00B22	V.RESISTOR 200	1	
			MISCELLANEOUS		
		VSC1834	SHIELD CASE (BOTTOM)		
		VSC1833	SHIELD CASE (MAIN)		
		VSC2352	SHIELD CASE (TOP)		

Ref.No.		Part No.	Part Name & Description	Pcs	Remarks
	■	VEP06482B	OPERATION C.B.A.		NV-D48EG(NLA)
		VEP06482C			NV-D48B(NLA)
			DIODES		
D6201		LN28RCPP	LED	1	
D6202		LN38GCPPSVT	LED	1	
D6203,04		MA165	DIODE	2	
			CONNECTORS		
P6201		VJS1837	CONNECTOR (FEMALE)	1	
P6202		VJP1249T	CONNECTOR(MALE) 9P	1	
			RESISTORS		
R6201,02		ERJ6GMYJ181	CHIP 1/16W 180	2	
R6203		ERJ6GMYJ102	CHIP 1/16W 1K	1	
			SWITCHS		
SW6201,02		EVQQS307K	SWITCH	2	
SW6203		ESD14314	SWITCH	1	
SW6205		EVQQS307K	SWITCH	1	
SW6206		EVQQS307K	SWITCH	1	NV-D48EG
SW6207-12		EVQQS307K	SWITCH	6	
SW6213		EVQQS307K	SWITCH	1	NV-D48EG
			VARIABLE RESISTORS		
VR2007,08		EVUFSAEC4B15	V.RESISTOR 1M	2	
VR3004		EVUJ16EC4B24	V.RESISTOR 20K	1	
			MISCELLANEOUS		
		VGU3364	SWITCH KNOB	2	
		VMD0504	LED HOLDER	2	
	■	VEP07450C	TIMER C.B.A.		NV-D48EG(NLA)
	■	VEP07450B			NV-D48B(NLA)
			CAPACITORS		
C6701		ECEA0JK470	E.CAPACITOR 6.3V 47U	1	
C6702		ECKF1H102KB	C.CAPACITOR 50V 1000P	1	
C6703		ECEA1HK010	E.CAPACITOR 50V 1U	1	
C6704		ECEA1HK3R3	E.CAPACITOR 50V 3.3U	1	
C7501		ECRHA030E41	TRIMER 30P	1	
C7502		ECUM1H080DCN	C.CAPACITOR CH 50V 8P	1	
C7503		ECUX1H104ZFN	CHIP 50V 0.1U	1	
C7504		ECEA0JK221	E.CAPACITOR 6.3V 220U	1	
C7505		ECUM1H220JCN	CHIP 50V 22P	1	
C7506		ECUM1H330JCN	C.CAPACITOR CH 50V 33P	1	
C7507		ECEA1HK220	E.CAPACITOR 50V 22U	1	
C7508		ECEA0JK470	E.CAPACITOR 6.3V 47U	1	
C7509		ECUM1H331KBN	CHIP 50V 330P	1	
C7510		ECUX1H104ZFN	CHIP 50V 0.1U	1	
C7511		ECUM1H103ZFN	CHIP 50V 0.01U	1	
C7520		ECEA1HKR22	E.CAPACITOR 50V 0.22U	1	
C7521		ECUM1H102KBN	CHIP 50V 1000P	1	
			DIODES		
D6701		PN323B	PHOTO DIODE	1	
D7501		ERA15-01	DIODE	1	
D7502		MA165	DIODE	1	
D7503		MA4075H	DIODE	1	
D7506-13		MA165	DIODE	8	
D7521		MA165	DIODE	1	NV-D48B
D7522		MA165	DIODE	1	NV-D48EG

To guarantee the FUNCTION,SAFETY and RELIABLITY of repaired units,only use ORIGINAL REPLACEMENT PARTS which are listed with their part numbers in this parts list section.

Ref.No.		Part No.	Part Name & Description	Pcs	Remarks
D7524,25		MA165	DIODE	2	NV-D48B
D7526		MA165	DIODE	2	
D7527		MA165	DIODE	1	NV-D48EG
D7531,32		MA165	DIODE	2	NV-D48B
D7534-36		MA165	DIODE	3	
D7538		MA165	DIODE	1	
			DISPLAY TUBE		
DP7501		VSL0113A	DISPLAY TUBE	1	
			ICS		
IC6701		UPC1490HA	IC	1	
IC7501		MN15283VPY	IC	1	
IC7502		MN1226	IC	1	
IC7503		MN1280P	IC	1	
IC7505		MN1280	IC	1	
			COIL		
L7501		VLQEL05F221K	COIL 220UH	1	
			CONNECTORS		
P7501		VJS1903	CONNECTOR	1	
P7502		VJS1491	CONNECTOR(FEMALE)	1	
P7504		VJS1937	CONNECTOR (FEMALE)	1	
			TRANSISTOR		
Q7501		2SD601	TRANSISTOR CHIP	1	
			COMBINATION PARTS		
QR7501		UN2112	TRANSISTOR-RESISTOR	1	
QR7509		UN2113	TRANSISTOR-RESISTOR	1	
QR7510,11		UN2213	TRANSISTOR-RESISTOR	2	
			RESISTORS		
R6701		ERDS2TJ154	C.RESISTOR 1/4W 150K	1	
R6702		ERDS2TJ8R2	C.RESISTOR 1/4W 8.2	1	
R7501		ERJ6GMYJ122	CHIP 1/16W 1.2K	1	
R7502		ERJ6GMYJ224	CHIP 1/16W 220K	1	
R7503		ERJ6GMYJ473	CHIP 1/16W 47K	1	
R7504		ERJ6GMYJ103	CHIP 1/16W 10K	1	
R7505		ERJ6GMYJ473	CHIP 1/16W 47K	1	
R7509		ERJ6GMYJ223	CHIP 1/16W 22K	1	
R7510		ERJ6GMYJ102	CHIP 1/16W 1K	1	
R7511-14		ERJ6GMYJ182	CHIP 1/16W 1.8K	4	
R7515		ERJ6GMYJ102	CHIP 1/16W 1K	1	
R7519		ERJ6GMYJ104	CHIP 1/16W 100K	1	
R7520-22		ERJ6GMYJ103	CHIP 1/16W 10K	3	
R7523		ERDS1TJ120	C.RESISTOR 1/2W 12	1	
R7530		ERJ6GMYJ332	CHIP 1/16W 3.3K	1	
R7532		ERJ6GMYJ473	CHIP 1/16W 47K	1	
R7538		ERJ6GMYJ221	CHIP 1/16W 220	1	
R7540		ERJ6GMYJ473	CHIP 1/16W 47K	1	
R7543		ERJ6GMYJ102	CHIP 1/16W 1K	1	
			SWITCH		
SW7539		EVQQS307K	SWITCH	1	
			VARIABLE RESISTOR		
VR6701		EVMLGGA00B15	V.RESISTOR 100K	1	
			CRYSTAL OSCILLATORS		
X7501		VSX0140A	CRYSTAL OSCILLATOR	1	
X7502		VSX0094A	CRYSTAL OSCILLATOR	1	

Ref.No.		Part No.	Part Name & Description	Pcs	Remarks
			MISCELLANEOUS		
		VJF0398	FIP HOLDER	1	
	■	VEP03528A	SUB DIGITAL C.B.A.		(NLA)
			CAPACITORS		
C9001		ECEA1HK4R7	E.CAPACITOR 50V 4.7U	1	
C9003		ECEA0JK101	E.CAPACITOR 6.3V 100U	1	
C9004,05		ECUX1H104ZFN	CHIP 50V 0.1U	2	
C9006		ECEA0JK101	E.CAPACITOR 6.3V 100U	1	
C9007		ECEA1HK4R7	E.CAPACITOR 50V 4.7U	1	
C9009		ECEA0JK101	E.CAPACITOR 6.3V 100U	1	
C9010,11		ECUX1H104ZFN	CHIP 50V 0.1U	2	
C9012		ECEA0JK101	E.CAPACITOR 6.3V 100U	1	
C9013-15		ECUX1H104ZFN	CHIP 50V 0.1U	3	
C9016		ECEA0JK470	E.CAPACITOR 6.3V 47U	1	
C9017		ECUX1H104ZFN	CHIP 50V 0.1U	1	
C9018-20		ECEA0JK470	E.CAPACITOR 6.3V 47U	3	
C9021		ECUX1H104ZFN	CHIP 50V 0.1U	1	
C9022,23		ECUM1H221KBN	C.CAPACITOR CH 50V 220P	2	
C9024		ECUX1H104ZFN	CHIP 50V 0.1U	1	
C9025		ECEA1HK0R1	E.CAPACITOR 50V 0.1U	1	
C9026		ECUX1H104ZFN	CHIP 50V 0.1U	1	
C9027,28		ECUM1H221KBN	C.CAPACITOR CH 50V 220P	2	
C9029		ECUX1H104ZFN	CHIP 50V 0.1U	1	
C9030		ECEA1HK0R1	E.CAPACITOR 50V 0.1U	1	
C9031		ECEA0JK101	E.CAPACITOR 6.3V 100U	1	
C9032		ECEA0JK221	E.CAPACITOR 6.3V 220U	1	
C9033,34		ECUX1H104ZFN	CHIP 50V 0.1U	2	
C9035		ECEA1HK0R1	E.CAPACITOR 50V 0.1U	1	
C9036		ECEA0JK470	E.CAPACITOR 6.3V 47U	1	
C9037		ECUX1H104ZFN	CHIP 50V 0.1U	1	
C9038		ECEA1CK100	E.CAPACITOR 16V 10U	1	
C9039		ECEA0JK330	E.CAPACITOR 6.3V 33U	1	
C9040,41		ECUX1H104ZFN	CHIP 50V 0.1U	2	
C9042		ECEA1CK100	E.CAPACITOR 16V 10U	1	
C9043		ECUX1H104ZFN	CHIP 50V 0.1U	1	
C9044		ECEA0JK221	E.CAPACITOR 6.3V 220U	1	
C9045-53		ECUX1H104ZFN	CHIP 50V 0.1U	9	
C9054		ECEA0JK470	E.CAPACITOR 6.3V 47U	1	
C9055		ECUM1H103KBN	CHIP 50V 0.01U	1	
C9056,57		ECUM1H221KBN	C.CAPACITOR CH 50V 220P	2	
C9058		ECEA0JK221	E.CAPACITOR 6.3V 220U	1	
C9501		ECEA0JK470	E.CAPACITOR 6.3V 47U	1	
C9502		ECUM1H152KBN	CHIP 50V 1500P	1	
C9503		ECUM1H221KBN	C.CAPACITOR CH 50V 220P	1	
C9504		ECEA1HK010	E.CAPACITOR 50V 1U	1	
C9507		ECEA1EKN3R3	ELECTROLYTIC 25V 3.3U	1	
C9508		ECEA1CK470	E.CAPACITOR 16V 47U	1	
C9509		ECUX1H104ZFN	CHIP 50V 0.1U	1	
C9510		ECUM1H332KBN	CHIP 50V 3300P	1	
C9511		ECUM1H103ZFN	CHIP 50V 0.01U	1	
C9512		ECEA1EK3R3	E.CAPACITOR 25V 3.3U	1	
C9513		ECEA1HK2R2	E.CAPACITOR 50V 2.2U	1	
C9514		ECEA1EK3R3	E.CAPACITOR 25V 3.3U	1	
C9515		ECEA0JK470	E.CAPACITOR 6.3V 47U	1	
C9516		ECUX1H104ZFN	CHIP 50V 0.1U	1	
C9517		ECEA1HKR22	E.CAPACITOR 50V 0.22U	1	
C9519		ECUM1H220JCN	CHIP 50V 22P	1	
C9520,21		ECUM1H151JCN	CHIP 50V 150P	2	
C9522		ECEA1HK2R2	E.CAPACITOR 50V 2.2U	1	
C9523		ECEA1EK3R3	E.CAPACITOR 25V 3.3U	1	
C9524		ECEA1HK010	E.CAPACITOR 50V 1U	1	
C9525		ECUM1H100DCN	CHIP 50V 10P	1	
C9527		ECUM1H103ZFN	CHIP 50V 0.01U	1	
C9528,29		ECUM1H221KBN	C.CAPACITOR CH 50V 220P	2	
C9530,31		ECUM1H103ZFN	CHIP 50V 0.01U	2	
C9532		ECUX1H104ZFN	CHIP 50V 0.1U	1	
C9533		ECUM1H103ZFN	CHIP 50V 0.01U	1	

To guarantee the FUNCTION,SAFETY and RELIABLITY of repaired units,only use ORIGINAL REPLACEMENT PARTS which are listed with their part numbers in this parts list section.

Ref.No.		Part No.	Part Name & Description	Pcs	Remarks
C9534-36		ECUX1H104ZFN	CHIP 50V 0.1U	3	
C9537		ECEA1HKR47	E.CAPACITOR 50V 0.47U	1	
C9538		ECUX1H104ZFN	CHIP 50V 0.1U	1	
C9539		ECEA1EKN3R3	ELECTROLYTIC 25V 3.3U	1	
C9540		ECUM1H331KBN	CHIP 50V 330P	1	
C9541		ECEA0JK470	E.CAPACITOR 6.3V 47U	1	
C9542,43		ECUM1H391KBN	CHIP 50V 390P	2	
C9544,45		ECEA1HK2R2	E.CAPACITOR 50V 2.2U	2	
C9546		ECQB1H102JH	P.CAPACITOR 50V 1000P	1	
C9547		ECQV1H473JZ	P.CAPACITOR 50V 0.047U	1	
C9548		ECQB1H152JH	P.CAPACITOR 50V 1500P	1	
C9549		ECEA1EK4R7	E.CAPACITOR 25V 4.7U	1	
C9550		ECQV1H683JZ	P.CAPACITOR 50V 0.068U	1	
C9551		ECQB1H103JH	P.CAPACITOR 50V 0.01U	1	
C9552		ECQV1H104JZ	P.CAPACITOR 50V 0.1U	1	
C9554		ECEA1HK010	E.CAPACITOR 50V 1U	1	
C9555		ECQB1H103JH	P.CAPACITOR 50V 0.01U	1	
C9556		ECQP1H562JZ	P.CAPACITOR 50V 5600P	1	
C9557		ECEA1CK470	E.CAPACITOR 16V 47U	1	
C9558		ECQB1H102JH	P.CAPACITOR 50V 1000P	1	
C9559		ECQV1H473JZ	P.CAPACITOR 50V 0.047U	1	
C9560		ECQB1H152JH	P.CAPACITOR 50V 1500P	1	
C9561		ECEA1EK4R7	E.CAPACITOR 25V 4.7U	1	
C9562		ECQV1H683JZ	P.CAPACITOR 50V 0.068U	1	
C9563		ECQB1H103JH	P.CAPACITOR 50V 0.01U	1	
C9564		ECQV1H104JZ	P.CAPACITOR 50V 0.1U	1	
C9566		ECEA1HK010	E.CAPACITOR 50V 1U	1	
C9567		ECQB1H103JH	P.CAPACITOR 50V 0.01U	1	
C9568		ECQP1H562JZ	P.CAPACITOR 50V 5600P	1	
C9569		ECEA1CK470	E.CAPACITOR 16V 47U	1	
C9572		ECEA0JK470	E.CAPACITOR 6.3V 47U	1	
C9573		ECUX1H104ZFN	CHIP 50V 0.1U	1	
C9574		ECUM1H220JCN	CHIP 50V 22P	1	
C9575		ECUM1H221KBN	C.CAPACITOR CH 50V 220P	1	
C9576		ECUM1H103ZFN	CHIP 50V 0.01U	1	
C9577,78		ECUM1H151JCN	CHIP 50V 150P	2	
C9579		ECUM1H100DCN	CHIP 50V 10P	1	
C9580,81		ECUM1H103ZFN	CHIP 50V 0.01U	2	
C9582		ECEA1EK3R3	E.CAPACITOR 25V 3.3U	1	
C9583-85		ECUX1H104ZFN	CHIP 50V 0.1U	3	
C9586		ECEA1HKR47	E.CAPACITOR 50V 0.47U	1	
C9587		ECUX1H104ZFN	CHIP 50V 0.1U	1	
C9588		ECEA1EKN3R3	ELECTROLYTIC 25V 3.3U	1	
C9589,90		ECUM1H221KBN	C.CAPACITOR CH 50V 220P	2	
C9591		ECUM1H331KBN	CHIP 50V 330P	1	
C9593-95		ECUX1H104ZFN	CHIP 50V 0.1U	3	
C9596		ECEA1HK010	E.CAPACITOR 50V 1U	1	
C9597		ECEA1CK100	E.CAPACITOR 16V 10U	1	
C9598		ECUM1H220JCN	CHIP 50V 22P	1	
C9599,00		ECUM1H223KBN	C.CAPACITOR CH 50V 0.022U	2	
C9601		ECEA0JK470	E.CAPACITOR 6.3V 47U	1	
C9602		ECEA1CK100	E.CAPACITOR 16V 10U	1	
C9603		ECEA1CK470	E.CAPACITOR 16V 47U	1	
C9606		ECUM1H331JCN	C.CAPACITOR CH 50V 330P	1	
C9610		ECEA1HK010	E.CAPACITOR 50V 1U	1	
C9611		ECUM1H181JCN	C.CAPACITOR CH 50V 180P	1	
C9612		ECUM1H030DCN	CHIP 50V 3P	1	
			DIODES		
D9001		MA165	DIODE	1	
D9501,02		MA178	DIODE	2	
			DELAY		
DL9501		EFDEN645A31F	DELAY	1	
			FILTERS		
FL9001		ELB4S030	FILTER	1	
FL9002-05		ELXTS101GA	FILTER	4	
FL9006-08		VLF0526	FILTER	3	
FL9009		VLF0523	FILTER	1	
FL9010,11		ELXTS101GA	FILTER	2	
FL9013-15		VLF0526	FILTER	3	

Ref.No.		Part No.	Part Name & Description	Pcs	Remarks
FL9016		VLF0523	FILTER	1	
FL9017		VLF0526	FILTER	1	
FL9018-22		ELXTS101GA	FILTER	5	
FL9023		VLF0523	FILTER	1	
FL9025		VLF0523	FILTER	1	
FL9026,27		ELXTS101GA	FILTER	2	
FL9028		VLF0523	FILTER	1	
FL9501		ELB4T023	FILTER	1	
			ICS		
IC9001		MN52040VZS	IC	1	
IC9002,03		TMS446112SDL	IC	2	
IC9004		MN15522VPG	IC	1	
IC9005-07		MN65523A	IC	3	
IC9008,09		MN74HC4066S	IC	2	
IC9010		UPD6951C	IC	1	
IC9011,12		MN6790	IC	2	
IC9013		MN1280	IC	1	
IC9014		AN78L05	IC	1	
IC9501		BA7044N	IC	1	
IC9503		MN4066BS	IC	1	
IC9504		MN4053BS	IC	1	
IC9505		AN3211S	IC	1	
IC9506		AN3171S	IC	1	
IC9507,08		LA7800	IC	2	
IC9509		AN3171S	IC	1	
IC9510		AN3181S	IC	1	
			COILS		
L9002,03		VLQEL05F101K	COIL 100UH	2	
L9004,05		VLQEL05F271K	COIL 270UH	2	
L9006-08		VLP0054	COIL	3	
L9501,02		VLQEL05F101K	COIL 100UH	2	
L9503		VLQEL05F560K	COIL 56UH	1	
L9504		VLQEL05F331K	COIL 330UH	1	
L9505		EIK7EN011B	COIL 10H	1	
L9506		EIK7EN012B	COIL 100H	1	
L9507,08		VLQEL05F681K	COIL 680UH	2	
L9509-12		VLQEL05F101K	COIL 100UH	4	
L9513		VLQEL05F560K	COIL 56UH	1	
L9514		VLQEL05F331K	COIL 330UH	1	
L9515		VLQEL05F560K	COIL 56UH	1	
L9517,18		VLQEL05F101K	COIL 100UH	2	
			CONNECTORS		
P9501		VJP1250T	CONNECTOR(MALE) 10P	1	
P9502		VJP1244T	CONNECTOR(MALE) 4P	1	
			TRANSISTORS		
Q9001-03		2SD601	TRANSISTOR CHIP	3	
Q9004-06		2SB709	TRANSISTOR CHIP	3	
Q9501,02		2SD601	TRANSISTOR CHIP	2	
Q9503		2SC2295	TRANSISTOR	1	
Q9504,05		2SB709	TRANSISTOR CHIP	2	
Q9506		2SD601	TRANSISTOR CHIP	1	
Q9508,09		2SB709	TRANSISTOR CHIP	2	
Q9510		2SC2295	TRANSISTOR	1	
Q9511		2SD601	TRANSISTOR CHIP	1	
Q9512,13		2SB709	TRANSISTOR CHIP	2	
Q9516		2SB709	TRANSISTOR CHIP	1	
Q9517		2SD601	TRANSISTOR CHIP	1	
Q9518-21		2SB709	TRANSISTOR CHIP	4	
Q9522		2SD601	TRANSISTOR CHIP	1	
Q9523,24		2SB709	TRANSISTOR CHIP	2	
Q9525,26		2SD601	TRANSISTOR CHIP	2	
Q9527-29		2SB709	TRANSISTOR CHIP	3	
Q9530		2SD601	TRANSISTOR CHIP	1	
Q9531		2SB709	TRANSISTOR CHIP	1	
Q9532		2SD601	TRANSISTOR CHIP	1	

To guarantee the FUNCTION,SAFETY and RELIABLITY of repaired units,only use ORIGINAL REPLACEMENT PARTS which are listed with their part numbers in this parts list section.

Ref.No.		Part No.	Part Name & Description	Pcs	Remarks
			COMBINATION PARTS		
QR9001		UN2212	TRANSISTOR-RESISTOR	1	
QR9501		UN2111	TRANSISTOR-RESISTOR	1	
QR9502,03		UN2213	TRANSISTOR-RESISTOR	2	
QR9504		UN2212	TRANSISTOR-RESISTOR	1	
QR9505		UN2211	TRANSISTOR-RESISTOR	1	
QR9506		UN2111	TRANSISTOR-RESISTOR	1	
QR9507		UN2211	TRANSISTOR-RESISTOR	1	
QR9508		UN2111	TRANSISTOR-RESISTOR	1	
QR9509,10		UN2213	TRANSISTOR-RESISTOR	2	
			RESISTORS		
R9001		ERJ6GMYJ470	M.RESISTOR CH1/16W 47	1	
R9002		ERJ6GMYJ561	CHIP 1/16W 560	1	
R9003		ERJ6GMYJ470	M.RESISTOR CH1/16W 47	1	
R9004-07		ERJ6GMYJ561	CHIP 1/16W 560	4	
R9008		ERJ6GMYJ182	CHIP 1/16W 1.8K	1	
R9009		ERJ6GMYJ332	CHIP 1/16W 3.3K	1	
R9010		EROS2CKG1800	M.RESISTOR 1/4W 180	1	
R9011,12		EROS2CKG68R0	M.RESISTOR 1/4W 68.0	2	
R9013		EROS2CKG82R0	M.RESISTOR 1/4W 82.0	1	
R9014-18		ERJ6GMYJ821	CHIP 1/16W 820	5	
R9019		ERJ6GMYJ391	CHIP 1/16W 390	1	
R9020		ERJ6GMYG202	M.RESISTOR CH1/16W 2K	1	
R9021		ERJ6GMYJ102	CHIP 1/16W 1K	1	
R9022		ERDS2TJ102	C.RESISTOR 1/4W 1K	1	
R9023		ERDS1TJ470	C.RESISTOR 1/2W 47	1	
R9024-32		ERJ6GMYJ101	CHIP 1/16W 100	9	
R9034-42		ERJ6GMYJ101	CHIP 1/16W 100	9	
R9044		ERJ6GMYJ333	CHIP 1/16W 33K	1	
R9045		ERJ6GMYJ183	CHIP 1/16W 18K	1	
R9046,47		ERJ6GMYJ103	CHIP 1/16W 10K	2	
R9048,49		ERJ6GMYJ101	CHIP 1/16W 100	2	
R9501		ERJ6GMYJ123	CHIP 1/16W 12K	1	
R9502		ERJ6GMYJ272	CHIP 1/16W 2.7K	1	
R9503		ERJ6GMYJ182	CHIP 1/16W 1.8K	1	
R9505		ERJ6GMYJ223	CHIP 1/16W 22K	1	
R9506		ERJ6GMYJ103	CHIP 1/16W 10K	1	
R9507		ERJ6GMYJ222	CHIP 1/16W 2.2K	1	
R9508		ERJ6GMYJ152	CHIP 1/16W 1.5K	1	
R9509		ERJ6GMYJ681	CHIP 1/16W 680	1	
R9510		ERJ6GMYJ102	CHIP 1/16W 1K	1	
R9511		ERJ6GMYJ222	CHIP 1/16W 2.2K	1	
R9512		ERJ6GMYJ562	CHIP 1/16W 5.6K	1	
R9513,14		ERJ6GMYJ223	CHIP 1/16W 22K	2	
R9515		ERJ6GMYJ152	CHIP 1/16W 1.5K	1	
R9516		ERJ6GMYJ102	CHIP 1/16W 1K	1	
R9517		ERJ6GMYJ122	CHIP 1/16W 1.2K	1	
R9518		ERJ6GMYJ272	CHIP 1/16W 2.7K	1	
R9519		ERJ6GMYJ392	CHIP 1/16W 3.9K	1	
R9520		ERJ6GMYJ332	CHIP 1/16W 3.3K	1	
R9522		ERJ6GMYJ152	CHIP 1/16W 1.5K	1	
R9523		ERJ6GMYJ102	CHIP 1/16W 1K	1	
R9524		ERJ6GMYJ821	CHIP 1/16W 820	1	
R9525,26		ERJ6GMYJ102	CHIP 1/16W 1K	2	
R9527		ERJ6GMYJ222	CHIP 1/16W 2.2K	1	
R9528		ERJ6GMYJ331	CHIP 1/16W 330	1	
R9529		ERJ6GMYJ683	CHIP 1/16W 68K	1	
R9530,31		ERJ6GMYJ223	CHIP 1/16W 22K	2	
R9532		ERJ6GMYJ103	CHIP 1/16W 10K	1	
R9533		ERJ6GMYJ332	CHIP 1/16W 3.3K	1	
R9534		ERJ6GMYJ102	CHIP 1/16W 1K	1	
R9535		ERJ6GMYJ221	CHIP 1/16W 220	1	
R9537		ERJ6GMYJ122	CHIP 1/16W 1.2K	1	
R9538		ERJ6GMYJ391	CHIP 1/16W 390	1	
R9539		ERJ6GMYJ471	CHIP 1/16W 470	1	
R9540		ERJ6GMYJ224	CHIP 1/16W 220K	1	
R9541		ERJ6GMYJ103	CHIP 1/16W 10K	1	
R9542		ERJ6GMYJ223	CHIP 1/16W 22K	1	
R9543		ERJ6GMYJ124	CHIP 1/16W 120K	1	
R9544		ERJ6GMYJ392	CHIP 1/16W 3.9K	1	
R9545		ERJ6GMYJ562	CHIP 1/16W 5.6K	1	
R9546		ERJ6GMYJ153	CHIP 1/16W 15K	1	

Ref.No.		Part No.	Part Name & Description	Pcs	Remarks
R9547		ERJ6GMYJ182	CHIP 1/16W 1.8K	1	
R9548		ERJ6GMYJ102	CHIP 1/16W 1K	1	
R9549		ERJ6GMYJ182	CHIP 1/16W 1.8K	1	
R9550		ERJ6GMYJ102	CHIP 1/16W 1K	1	
R9551		ERJ6GMYJ103	CHIP 1/16W 10K	1	
R9552		ERJ6GMYJ221	CHIP 1/16W 220	1	
R9553		ERJ6GMYJ334	CHIP 1/16W 330K	1	
R9554		ERJ6GMYJ822	CHIP 1/16W 8.2K	1	
R9555		ERJ6GMYJ123	CHIP 1/16W 12K	1	
R9556		ERJ6GMYJ103	CHIP 1/16W 10K	1	
R9557,58		ERJ6GMYJ224	CHIP 1/16W 220K	2	
R9559		ERJ6GMYJ222	CHIP 1/16W 2.2K	1	
R9560,61		ERJ6GMYJ123	CHIP 1/16W 12K	2	
R9562		ERJ6GMYJ563	CHIP 1/16W 56K	1	
R9563		ERJ6GMYJ102	CHIP 1/16W 1K	1	
R9564		ERJ6GMYJ103	CHIP 1/16W 10K	1	
R9565		ERJ6GMYJ221	CHIP 1/16W 220	1	
R9566		ERJ6GMYJ334	CHIP 1/16W 330K	1	
R9567		ERJ6GMYJ822	CHIP 1/16W 8.2K	1	
R9568		ERJ6GMYJ123	CHIP 1/16W 12K	1	
R9569		ERJ6GMYJ103	CHIP 1/16W 10K	1	
R9570,71		ERJ6GMYJ224	CHIP 1/16W 220K	2	
R9572		ERJ6GMYJ222	CHIP 1/16W 2.2K	1	
R9573,74		ERJ6GMYJ123	CHIP 1/16W 12K	2	
R9575		ERJ6GMYJ563	CHIP 1/16W 56K	1	
R9576		ERJ6GMYJ102	CHIP 1/16W 1K	1	
R9582,83		ERJ6GMYJ102	CHIP 1/16W 1K	2	
R9584		ERJ6GMYJ222	CHIP 1/16W 2.2K	1	
R9585		ERJ6GMYJ331	CHIP 1/16W 330	1	
R9586		ERJ6GMYJ683	CHIP 1/16W 68K	1	
R9587		ERJ6GMYJ102	CHIP 1/16W 1K	1	
R9588,89		ERJ6GMYJ222	CHIP 1/16W 2.2K	2	
R9590		ERJ6GMYJ471	CHIP 1/16W 470	1	
R9591		ERJ6GMYJ331	CHIP 1/16W 330	1	
R9592		ERJ6GMYJ224	CHIP 1/16W 220K	1	
R9593		ERJ6GMYJ103	CHIP 1/16W 10K	1	
R9594		ERJ6GMYJ124	CHIP 1/16W 120K	1	
R9595		ERJ6GMYJ223	CHIP 1/16W 22K	1	
R9596		ERJ6GMYJ392	CHIP 1/16W 3.9K	1	
R9597		ERJ6GMYJ562	CHIP 1/16W 5.6K	1	
R9598		ERJ6GMYJ153	CHIP 1/16W 15K	1	
R9599		ERJ6GMYJ221	CHIP 1/16W 220	1	
R9600		ERJ6GMYJ102	CHIP 1/16W 1K	1	
R9601		ERJ6GMYJ273	CHIP 1/16W 27K	1	
R9602		ERJ6GMYJ223	CHIP 1/16W 22K	1	
R9603		ERJ6GMYJ222	CHIP 1/16W 2.2K	1	
R9604		ERJ6GMYJ152	CHIP 1/16W 1.5K	1	
R9605		ERJ6GMYG103	CHIP 1/16W 10K	1	
R9606		ERJ6GMYG123	M.RESISTOR CH1/16W 12K	1	
R9607-09		ERJ6GMYJ332	CHIP 1/16W 3.3K	3	
R9610		ERDS1TJ391	C.RESISTOR 1/2W 390	1	
R9611		ERJ6GMYJ104	CHIP 1/16W 100K	1	
R9612		ERJ6GMYJ103	CHIP 1/16W 10K	1	
R9613		ERJ6GMYJ273	CHIP 1/16W 27K	1	
R9614		ERJ6GMYJ102	CHIP 1/16W 1K	1	
R9615		ERJ6GMYJ221	CHIP 1/16W 220	1	
R9616		ERJ6GMYJ102	CHIP 1/16W 1K	1	
R9617		ERJ6GMYJ681	CHIP 1/16W 680	1	
R9618		ERJ6GMYJ471	CHIP 1/16W 470	1	
R9619		ERJ6GMYJ123	CHIP 1/16W 12K	1	
R9620		ERJ6GMYJ272	CHIP 1/16W 2.7K	1	
R9621		ERJ6GMYJ182	CHIP 1/16W 1.8K	1	
R9622		ERJ6GMYJ221	CHIP 1/16W 220	1	
R9623		ERJ6GMYJ152	CHIP 1/16W 1.5K	1	
R9624		ERJ6GMYJ472	CHIP 1/16W 4.7K	1	
R9625		ERJ6GMYJ562	CHIP 1/16W 5.6K	1	
R9626		ERJ6GMYJ222	CHIP 1/16W 2.2K	1	
R9627		ERJ6GMYJ560	M.RESISTOR CH1/16W 56	1	
R9628		ERJ6GMYJ562	CHIP 1/16W 5.6K	1	
R9629		ERJ6GMYJ222	CHIP 1/16W 2.2K	1	
R9630		ERJ6GMYJ560	M.RESISTOR CH1/16W 56	1	
R9631		ERQ12HJ1R2P	FUSE 1/2W 1.2	1	
			VARIABLE RESISTORS		

To guarantee the FUNCTION,SAFETY and RELIABLITY of repaired units,only use ORIGINAL REPLACEMENT PARTS which are listed with their part numbers in this parts list section.

Ref.No.		Part No.	Part Name & Description	Pcs	Remarks
VR9501		EVND4AA00B54	V.RESISTOR 50K	1	
VR9502		EVND4AA00B14	V.RESISTOR 10K	1	
VR9503		EVN38CA00B14	V.RESISTOR 10K	1	
VR9504		EVND4AA00B13	V.RESISTOR 1K	1	
VR9505		EVN38CA00B25	V.RESISTOR 200K	1	
VR9506		EVN38CA00B53	V.RESISTOR 5K	1	
VR9507		EVN38CA00B25	V.RESISTOR 200K	1	
VR9508		EVN38CA00B53	V.RESISTOR 5K	1	
VR9509		EVN38CA00B14	V.RESISTOR 10K	1	
VR9510		EVND4AA00B13	V.RESISTOR 1K	1	
			CRYSTAL OSCILLATORS		
X9001		EF0FC3584A5	CRYSTAL OSCILLATOR	1	
X9501		VSX0265	CRYSTAL OSCILLATOR	1	
X9502,03		VSX0225	CRYSTAL OSCILLATOR	2	
	■	VEP01310H	POWER C.B.A.		NV-D48EG<!>(NLA)
	■	VEP01310J			NV-D48B<!>(NLA)
			CAPACITORS		
C1001		ECQU2A224MNB	P.CAPACITOR 100V 0.22U	1	NV-D48EG
C1001		ECQU2A683MNB	P.CAPACITOR 100V 0.068U	1	NV-D48B
C1002		ECQU2A104MNB	M.CAPACITOR 100V 0.01U	1	
C1003		ECEA2AGE010	E.CAPACITOR 100V 1U	1	
C1004,05		VCC0016	CAPACITOR	2	
C1006-08		VCC0021	CAPACITOR	3	
C1009		ECOS2GU820B	E.CAPACITOR 400V 82U	1	
C1010		ECKD3D331KB	C.CAPACITOR 2KV 330P	1	
C1011		ECQE6473MZ	P.CAPACITOR 630V 0.047U	1	
C1012		ECEA1CGE470	E.CAPACITOR 16V 47U	1	
C1013		ECEA1AGE470	E.CAPACITOR 10V 47U	1	
C1014		ECQB1H472KH	P.CAPACITOR 50V 4700P	1	
C1016		ECQP1101T404	M.CAPACITOR 100V 100P	1	
C1017		ECEA1DFZ681Z	E.CAPACITOR 20V 680U	1	
C1018		ECEA1HGE100	E.CAPACITOR 50V 10U	1	
C1019		ECEA1AFZ331	E.CAPACITOR 10V 330U	1	
C1020		ECEA0JEE331	E.CAPACITOR 6.3V 330U	1	
C1021		ECEA1HGE101	E.CAPACITOR 50V 100U	1	
C1022		ECEA1DFZ681Z	E.CAPACITOR 20V 680U	1	
C1023-25		ECKF1H103ZF	C.CAPACITOR 50V 0.01U	3	
C1026		ECEA1HGE100	E.CAPACITOR 50V 10U	1	
C1027		ECKF1H103ZF	C.CAPACITOR 50V 0.01U	1	
C1028		ECEA1CGE100	E.CAPACITOR 16V 10U	1	
C1029		ECEA1AGE101	E.CAPACITOR 10V 100U	1	
C1031		ECKF1H103ZF	C.CAPACITOR 50V 0.01U	1	
C1032		ECEA1CGE100	E.CAPACITOR 16V 10U	1	
C1033		ECEA1CGE101	E.CAPACITOR 16V 100U	1	
C1034		ECEA1AGE101	E.CAPACITOR 10V 100U	1	
C1035		ECQV1H474JZ	P.CAPACITOR 50V 0.47U	1	
			DIODES		
D1001		ENB461D-05A	SURGE ABSORBER 460V	1	
D1002		MA178	DIODE	1	
D1004		S1WBA60	DIODE	1	
D1007		11EFS4	DIODE	1	
D1008		RL4ZLF	DIODE	1	
D1009		MA185	DIODE	1	
D1010		FMBG14	DIODE	1	
D1011		AK04V2	DIODE	1	
D1012		MA2200B	ZENER	1	
D1013		MA4130L	DIODE	1	
D1014		VSD0002	DIODE	1	
D1015		AP01CV2	DIODE	1	
D1016		MA4062H	DIODE	1	
D1017		SV03YS	DIODE	1	
			IC		
IC1001		STK5339A	IC	1	

Ref.No.		Part No.	Part Name & Description	Pcs	Remarks
			COILS		
L1001		ELF18D221F	COIL	1	NV-D48EG
L1001		ELF18D290A	COIL	1	NV-D48B
L1002		ELC07D220	COIL 22U	1	
			CONNECTOR		
P1001		VJP1929T	CONNECTOR (MALE)	1	
			TRANSISTORS		
Q1001		STRD1806E	TRANSISTOR	1	<!>
Q1002		2SD1856DUA	TRANSISTOR	1	
Q1003		2SD1275	TRANSISTOR	1	
Q1004		2SD1330	TRANSISTOR	1	
Q1006		2SD1330	TRANSISTOR	1	(S,T)
			COMBINATION PARTS		
QR1001		DTA143	TRANSISTOR-RESISTOR	1	
			RESISTORS		
R1001		ERC12GM334	S.RESISTOR 1/2W 330K	1	<!>
R1002		ERG1SJ823	M.RESISTOR 1W 82K	1	
R1003		ERG2SJ823	M.RESISTOR 2W 82K	1	
R1004		ERW2PKR39	WIRE WOUND 2W 0.39	1	
R1005,06		ERDS2TJ563	C.RESISTOR 1/4W 56K	2	
R1007		ERDS2TJ100	C.RESISTOR 1/4W 10	1	
R1008		ERG2SJ181	M.RESISTOR 2W 180	1	
R1012		ERG3ANJ683	M.RESISTOR 3W 68K	1	
R1013		ERF2AK2R2	W.RESISTOR 2W 2.2	1	
R1014		ERDS2TJ153	C.RESISTOR 1/4W 15K	1	
R1015,16		ERDS2TJ102	C.RESISTOR 1/4W 1K	2	
R1017		ERDS2TJ103	C.RESISTOR 1/4W 10K	1	
R1018		ERDS2TJ562	C.RESISTOR 1/4W 5.6K	1	
R1019		ERG12ANJ332	M.RESISTOR 1/2W 3.3K	1	
R1021		ERX1SJR20	M.RESISTOR 1W 0.20	1	
R1022		ERDS2TJ681	C.RESISTOR 1/4W 680	1	
R1023		ERDS2TJ103	C.RESISTOR 1/4W 10K	1	
			TRANSFORMER		
T1001		VLT0508	TRANSFORMER	1	<!>
	■	VEP66039C	DIGITAL SCANNER C.B.A.		NV-D48EG(NLA)
	■	VEP66039B			NV-D48B(NLA)
			CAPACITORS		
C01		ECEV1CA470P	E.CAPACITOR 16V 47U	1	
C02		ECEV1HAN010R	E.CAPACITOR 50V 1U	1	
C03,04		ECUX1E104ZFM	CHIP 25V 0.1U	2	
C05		ECSE1CY105ZR	TANTALUM 16V 1U	1	
C06		ECEV1CA470P	E.CAPACITOR 16V 47U	1	
C07,08		ECUX1H330JCN	CHIP 50V 33P	2	
C09-12		ECUX1H103ZFN	CHIP 50V 0.01U	4	
			DIODES		
D01		MA151WK	DIODE	1	
D04		MA151WK	DIODE	1	
D05		MA153	DIODE	1	
D06		SE303ACY	DIODE	1	
			ICS		
IC01		MN158453VPB	IC	1	

To guarantee the FUNCTION,SAFETY and RELIABLITY of repaired units,only use ORIGINAL REPLACEMENT PARTS which are listed with their part numbers in this parts list section.

Ref.No.		Part No.	Part Name & Description	Pcs	Remarks
IC02		UPC324G2	IC	1	
IC03		RC78L02UAA1	IC	1	
			COIL		
L01		ELT3K017B	COIL	1	
			LCD		
LCD01		VSL0131A	LCD	1	
			TRANSISTORS		
Q01,02		2SB710	TRANSISTOR CHIP	2	(Q,R,S)
Q03		2SB709	TRANSISTOR CHIP	1	(Q,R,S)
Q05		2SB709	TRANSISTOR CHIP	1	(Q,R,S)
			COMBINATION PART		
QR04		FA1L4Z	TRANSISTOR-RESISTOR	1	
			RESISTORS		
R01		ERJ6GMYJ560	CHIP 1/16W 56	1	
R02		ERJ6GMYJ102	CHIP 1/16W 1K	1	
R03		ERJ6GMYJ153	CHIP 1/16W 15K	1	
R04		ERJ6GMYJ332	CHIP 1/16W 3.3K	1	
R05		ERJ6GMYJ202	CHIP 1/16W 2K	1	
R06		ERJ6GMYJ244	CHIP 1/16W 240K	1	
R07		ERJ6GMYJ162	CHIP 1/16W 1.6K	1	
R08		ERJ6GMYJ224	CHIP 1/16W 220K	1	
R09		ERJ6GMYJ474	CHIP 1/16W 470K	1	
R10		ERJ6GMYK106	CHIP 1/16W 10M	1	
R11		ERJ6GMYJ105	CHIP 1/16W 1M	1	
R12		ERJ6GMYK106	CHIP 1/16W 10M	1	
R13		ERJ6GMYJ361	CHIP 1/16W 360	1	
R14		ERJ6GMYJ682	CHIP 1/16W 6.8K	1	
R15		ERJ6GMYJ332	CHIP 1/16W 3.3K	1	
R16,17		ERJ6GMYJ682	CHIP 1/16W 6.8K	2	
R18		ERJ8GCYJ120	CHIP 1/8W 12	1	
R19		ERJ6GMYJ474	CHIP 1/16W 470K	1	
R21		ERJ6GMYJ474	CHIP 1/16W 470K	1	
R23		ERJ6GMYJ682	CHIP 1/16W 6.8K	1	
R24		ERJ6GMYJ102	CHIP 1/16W 1K	1	
R29		ERJ8GCYJ150	CHIP 1/8W 15	1	
			SENSOR		
SN01		VSQ0567	SENSOR	1	
			SWITCHS		
SW01		VSS0126	SWITCH	1	
SW02		EVQQFV02K	SWITCH	1	
			VARIABLE RESISTOR		
VR09		EVND4KA00B35	V.RESISTOR 300K	1	
			CRYSTAL OSCILLATORS		
X01		VSX0246AT	CRYSTAL OSCILLATOR	1	
X02		EFBAL30D001K	CRYSTAL OSCILLATOR	1	
			MISCELLANEOUS		
		VGQ1406	TERMINAL BASE	1	
		VJR0401	TERMINAL ANGLE	2	
		VMX1324	SPACER	1	

Ref.No.		Part No.	Part Name & Description	Pcs	Remarks
	■	VEP66030C	PROGRAMMABLE REMOTE CONTROLLER C.B.A.		(NLA)
			CAPACITORS		
C1		ECEA0GKS101	E.CAPACITOR 4V 100U	1	
C2,C3		ECXF1H121KB	C.CAPACITOR 50V 120P	2	
C4		ECQB1H222KH	P.CAPACITOR 50V 2200P	1	
			DIODES		
D1		LN66	DIODE	1	
D2-D9		MA165	DIODE	8	
D10,11		MA165	DIODE	2	
			IC		
IC1		MN6011M	IC	1	
			COMBINATION PART		
QR1		UN1231	TRANSISTOR-RESISTOR	1	
			RESISTOR		
R1		ERDS2TJ1R0	C.RESISTOR 1/4W 1.0	1	
			CRYSTAL OSCILLATOR		
X1		VSX0201	CRYSTAL OSCILLATOR	1	
			MISCELLANEOUS		
		VJR0253	ELECTRODE (+)	1	
		VJR0254	ELECTRODE (-)	1	
	■	VEK3583	MECHANISM CONNECTION C.B.A.		(NLA)
			CONNECTORS		
P1504		VJS2342	CONNECTOR	1	
P1505		VJP1242T	CONNECTOR	1	
			RESISTORS		
R1501		ERDS2TJ223	C.RESISTOR 1/4W 22K	1	
R1502		ERDS2TJ223	C.RESISTOR 1/4W 22K	1	
	■	VEK3555	REEL SENSOR C.B.A.		(NLA)
			INTEGRATED CIRCUIT		
IC1501		ON2170	IC	1	
			CONNECTOR		
P1506		VJP1242T	CONNECTOR	1	
	■	VXA2689	LED C.B.A.		(NLA)

To guarantee the FUNCTION,SAFETY and RELIABLITY of repaired units,only use ORIGINAL REPLACEMENT PARTS which are listed with their part numbers in this parts list section.

Ref.No.		Part No.	Part Name & Description	Pcs	Remarks
			DIODE		
D1501		GL450	PHOTO DIODE	1	
			MISCELLANEOUS		
		VMD0911	LED HOLDER	1	
	■	VEK3577	TAKE UP PHOTO Tr. C.B.A.		(NLA)
			CAPACITOR		
C1502		ECKF1H102KB	C.CAPACITOR 50V 100P	1	
			CONNECTOR		
P1508		VJS2165	CONNECTOR	1	
			TRANSISTOR		
Q1502		PN150NV	TRANSISTOR	1	
			RESISTOR		
R1503		ERDS2TJ222	C.RESISTOR 1/4W 2.2K	1	
			MISCELLANEOUS		
		VMD0645	PHOTO Tr. HOLDER	1	
	■	VEK3578	SUUPLY PHOTO Tr. C.B.A.		(NLA)
			CAPACITOR		
C1501		ECKF1H102KB	C.CAPACITOR 50V 1000P	1	
			TRANSISTOR		
Q1501		PN150NV	TRANSISTOR	1	
			MISCELLANEOUS		
		VMD0645	PHOTO Tr. HOLDER	1	
	■	ENC87966	RF CONVERTER		NV-D48EG<!>
			DIODES		
D1		MA1051	ZENER	1	
D2		HSM276S	DIODE	1	
D3		MA166	DIODE	1	
D4		MA166	DIODE	1	

Ref.No.		Part No.	Part Name & Description	Pcs	Remarks
			INTEGRATED CIRCUIT		
IC1		LA7051	IC	1	
			TRANSISTORS		
Q1		2SC2570A	TRANSISTOR	1	
Q2		2SC2570A	TRANSISTOR	1	
			NOTE:		
			THE OTHER PARTS FOR		
			RF CONVERTER ARE NOT		
			AVAILABLE AS SPARE PARTS.		
	■	ENC87962	RF CONVERTER		NV-D48B<!>
			DIODES		
D1		MA1051	ZENER	1	
D2		HSM276S	DIODE	1	
D3		MA166	DIODE	1	
D4		MA75WK	DIODE	1	
D5		MA166	DIODE	1	
			INTEGRATED CIRCUIT		
IC1		LA7051	IC	1	
			TRANSISTORS		
Q1		2SC2570A	TRANSISTOR	1	
Q2		2SC2570A	TRANSISTOR	1	
Q3		2SC3130	TRANSISTOR	1	
			NOTE:		
			THE OTHER PARTS FOR		
			RF CONVERTER ARE NOT		
			AVAILABLE AS SPARE PARTS.		

To guarantee the FUNCTION,SAFETY and RELIABLITY of repaired units,only use ORIGINAL REPLACEMENT PARTS which are listed with their part numbers in this parts list section.